FM 4-30.3 (FM 9-43-1)

MAINTENANCE OPERATIONS AND PROCEDURES

HEADQUARTERS DEPARTMENT OF THE ARMY

DISTRIBUTION RESTRICTION: Approved for public release; distribution is unlimited.

***FM 4-30.3** (FM 9-43-1)

Field Manual
No. 4-30.3

Headquarters
Department of the Army
Washington, DC, 1 September 2000

MAINTENANCE OPERATIONS AND PROCEDURES

Contents

		Page
	Preface	viii
Chapter 1	**FUNDAMENTALS**	1-1
	Section I – Maintenance	1-2
	The Army Maintenance System	1-2
	Sustainment Maintenance Support	1-8
	Maintenance Allocation Chart	1-9
	Section II – Maintenance Support	1-13
	Methods	1-16
	Managing Battlefield Maintenance	1-17
	Centralized Management of Decentralized Operations	1-19
Chapter 2	**MAINTENANCE ORGANIZATIONS**	2-1
	Section I – Echelons Above Corps Area	2-1
	Army Service Component Command Organizations	2-1
	Area Maintenance and Supply Facility	2-3
	Theater Signal Maintenance Company (Sustainment), Echelons Above Corps	2-5
	Test, Measurement, and Diagnostic Equipment Maintenance Company	2-7
	Theater Army Area Command Organizations	2-11

Distribution Restriction: Approved for public release; distribution is unlimited**.**

*This publication supersedes FM 9-43-1, 21 Feb 97.

Logistics Support Element..... 2-13
Area Support Group Organization..... 2-15
Maintenance Battalion (Area Support Group)..... 2-17
Maintenance Company, DS, Maintenance Battalion (Area Support Group).... 2-18
Maintenance Company, GS, Maintenance Battalion (Area Support Group).... 2-20
Collection and Classification Company, Maintenance Battalion (Area Support Group)..... 2-22
Ordnance Missile Support Company (GS), Maintenance Battalion (ASG)..... 2-25
Maintenance Company (DS) (PATRIOT), Maintenance Battalion (ASG)..... 2-27
Section II – Corps Support Area..... 2-29
Corps Support Command Organization..... 2-29
Corps Support Group Organizations..... 2-30
Corps Support Battalion 2-31
Nondivisional Maintenance Company (DS), Corps Support Battalion (CSG)... 2-32
Ordnance Missile Support Company (DS), Corps Support Battalion (CSG)... 2-34
Maintenance Company (DS) (PATRIOT), Corps Support Battalion (CSG)..... 2-36
Section III – Division Support Area and Brigade Support Area..... 2-39
Heavy Division DISCOM..... 2-39
Main Support Battalion (Heavy Division)..... 2-41
Heavy Maintenance Company, Main Support Battalion (Heavy Division)..... 2-42
Electronic Maintenance Company, Main Support Battalion (Heavy Division).. 2-44
Forward Support Battalion, Heavy Division..... 2-47
Maintenance Company, Forward Support Battalion (Heavy Division)..... 2-49
Aviation Support Battalion (Heavy Division)..... 2-51
Ground Maintenance Company, Aviation Support Battalion (Heavy Division).. 2-53
Light Division DISCOM..... 2-55
Main Support Battalion (Light Division)..... 2-56
Maintenance Company, Main Support Battalion (Light Division)..... 2-57
Forward Support Battalion (Light Division)..... 2-59
Maintenance Company, Forward Support Battalion (Light Division)..... 2-60
Airborne Division DISCOM..... 2-61
Main Support Battalion (Airborne Division)..... 2-62
Heavy Maintenance Company, Main Support Battalion (Airborne Division)..... 2-63
Light Maintenance Company, Main Support Battalion (Airborne Division)..... 2-64
Forward Support Battalion (Airborne Division)..... 2-66
Maintenance Company, Forward Support Battalion (Airborne Division)..... 2-67
Air Assault Division DISCOM..... 2-68
Main Support Battalion (Air Assault Division)..... 2-69

Heavy Maintenance Company, Main Support Battalion (Air Assault Division)..... 2-70
Light Maintenance Company, Main Support Battalion (Air Assault Division)..... 2-71
Forward Support Battalion (Air Assault Division)..... 2-73
Maintenance Company, Forward Support Battalion (Air Assault Division)..... 2-74
Section IV – Covering Force Support Area..... 2-76
Support Squadron, Armored Cavalry Regiment..... 2-76
Maintenance Troop, Armored Cavalry Regiment 2-78
Support Battalion, Separate Infantry Brigade..... 2-79
Maintenance Company, Separate Infantry Brigade 2-80
Section V – Unit Maintenance Organization for Combat Units..... 2-83
Combat Battalion Organization..... 2-83
Headquarters and Headquarters Company..... 2-84
Maintenance Platoon..... 2-85
Section VI – Organization for Task Force Support..... 2-90
Echelons Above Corps Area Logistics Task Force..... 2-90
Corps Area Logistics Task Force..... 2-91
Battalion Task Force Organization..... 2-92
Unit Maintenance Organization for Task Force Support..... 2-94
Section VII – Modularity..... 2-96
Definition and Functions..... 2-96
Tenets..... 2-96
Major Approaches..... 2-97
Functionally Emulative Increments..... 2-98
Modular-Designed Elements..... 2-98
Other Approaches..... 2-99
Deployment..... 2-99
Section VIII – Personnel Responsibilities..... 2-101
Battalion Headquarters Staff..... 2-101
Company Personnel..... 2-103

Chapter 3 **MAINTENANCE SUPPORT OPERATIONS**..... 3-1
Section I – Tactical Operations..... 3-1
Unit-Level Maintenance—Offensive Operations..... 3-1
Direct-Support-Level Maintenance—Offensive Operations..... 3-2
Unit-Level Maintenance—Defensive Operations..... 3-6
Direct-Support-Level Maintenance—Defensive Operations..... 3-7
Unit-Level Maintenance—Retrograde Operations..... 3-8
Reconstitution Operations..... 3-9

Night Operations..... 3-10
NBC Environment..... 3-11
Section II – Nondivisional Maintenance Units..... 3-19
Maintenance Battalion..... 3-19
Battalion Headquarters..... 3-19
Nondivisional (DS) Maintenance Company..... 3-20
Nontactical Information Systems..... 3-21
Section III – Liaison, On-Site, and Emergency Services..... 3-24
Liaison Visits..... 3-24
On-Site Maintenance..... 3-25
Emergency Maintenance Service..... 3-26
Section IV – Stability and Support Operations..... 3-28
Peacekeeping..... 3-28
Humanitarian Operations..... 3-30
Disaster Relief..... 3-31
Section V – Adverse Environments..... 3-32
Desert Operations..... 3-32
Cold Weather Operations..... 3-37
Jungle Operations..... 3-41
Mountain Operations..... 3-42
Urban Terrain..... 3-43

Chapter 4 **MAINTENANCE MANAGEMENT**..... 4-1
Section I – **Process and Resources**..... 4-1
Process..... 4-2
Resources..... 4-6
Section II – Levels of Management..... 4-9
Materiel Management Center..... 4-9
Support Operations Office..... 4-10
Battalion-Level Management..... 4-10
Company-Level Management..... 4-11
Section III – Maintenance Management Information Systems..... 4-14
Standard Army Maintenance System..... 4-14
Unit-Level Logistics System—Ground..... 4-16
Section IV – **Maintenance Control**..... 4-24
Procedures..... 4-24
Production Methods..... 4-29
Quality Control Inspections..... 3-33
Work Flow..... 4-34
Evacuation..... 4-38
Management Tools and Techniques..... 4-39

Operational Readiness Float Transactions..... 4-45
Status Changes..... 4-46
Shop Supply Operations..... 4-46
Field Site Selection and Layout..... 4-48
Section V – Unit Internal Management..... 4-51
Mission Performance..... 4-51
Direct Support Maintenance Units..... 4-52

Chapter 5 **REPAIR PARTS SUPPLY OPERATIONS**..... 5-1
Section I – Supply Support Operations..... 5-1
Operating Concept..... 5-1
Supply System..... 5-2
Supply Support Activity Organization..... 5-3
Supply Support Activity Procedures..... 5-5
Prescribed Load List..... 5-9
Authorized Stockage List..... 5-9
Weapon System Replacement..... 5-10
Logistics Intelligence File..... 5-10
Section II – Other Supply Sources..... 5-12
Cannibalization..... 5-12
Fabrication..... 5-14
Controlled Exchange..... 5-14
Local Purchase..... 5-15

Chapter 6 **RECOVERY AND OTHER SUPPORTING MAINTENANCE ACTIONS**..... 6-1
Section I – Recovery..... 6-1
Responsibility..... 6-1
Management..... 6-2
Initiation..... 6-2
Repair and Recovery Plan..... 6-3
Special Considerations..... 6-4
Hazards..... 6-7
Section II –Collection and Classification..... 6-8
Battalion Maintenance Officer..... 6-8
Setting Up and Positioning a UMCP..... 6-8
DS Maintenance Collection..... 6-8
Materiel Classification..... 6-9
Section III – Evacuation..... 6-10
Principles..... 6-10
Responsibility and Control..... 6-10
Section IV – Retrograde and Reclamation..... 6-12

Responsibility..... 6-12
Procedures..... 6-12
Section V – Battle Damage Assessment and Repair..... 6-14
BDAR Actions..... 6-14
BDAR Training..... 6-14

Chapter 7 **TEST, MEASUREMENT, AND DIAGNOSTIC EQUIPMENT MAINTENANCE SUPPORT OPERATIONS**..... 7-1
Section I – TMDE Maintenance Support..... 7-1
Program Objectives..... 7-1
Management and Control..... 7-2
Section II – Theater TMDE Tactical Operations..... 7-5
TMDE Maintenance Company..... 7-5
Responsibilities..... 7-7

Chapter 8 **SAFETY, SECURITY, AND THE ENVIRONMENT**..... 8-1
Section I – Safety..... 8-1
Safety Program..... 8-1
Responsibilities and Duties..... 8-2
Accident Follow-Up Procedures..... 8-3
Equipment Operator Selection..... 8-4
Safety Standing Operating Procedures..... 8-4
Fire Prevention Program..... 8-4
Hazardous Communications Program..... 8-5
Personnel Safety Protection Programs..... 8-5
Safety Plans..... 8-6
General Safety Hazards..... 8-6
Maintenance Accident Prevention..... 8-9
Material Safety Data Sheets..... 8-10
Personnel Protective Clothing and Equipment..... 8-11
Risk Assessment and Risk Management..... 8-11
Section II – Security..... 8-13
Physical Security..... 8-13
Security During Tactical Operations..... 8-14
Information Security..... 8-15
Continuous Security Program..... 8-16
Signal Security..... 8-16
Section III – Environmental Management..... 8-17
Department of Defense Policy..... 8-17
Army Policy..... 8-17
Key Laws and Regulations..... 8-18

Army Environmental Compliance Achievement Program..... 8-19
Unit-Level Environmental Programs..... 8-20
Hazardous Materials Program..... 8-21
Hazardous Communications Program..... 8-23
Hazardous Waste Minimization Program..... 8-23
Training..... 8-25
Program Assessment..... 8-26

Appendix A **SAMPLE BATTALION (UNIT-LEVEL MAINTENANCE) SOP**..... A-1

Appendix B **SAMPLE DS MAINTENANCE EXTERNAL SOP**..... B-1

GLOSSARY.....Glossary-1

BIBLIOGRAPHY.....Bibliography-1

INDEX Index-1

Preface

This manual provides authoritative doctrine for the Army maintenance system to support maintenance operations at all echelons across the full range of military operations as part of the combat service support (CSS) system.

During the transition period that extends through the first decade of the twenty-first century, there will be a mixture of AOE and Force XXI units. In this manual, we begin to address emerging Force XXI doctrine as it impacts maintenance operations and procedures, including organizations, equipment, and personnel. Interim updates to this manual, unit-specific field manuals, and tactics, techniques, and procedures will be posted electronically on the CASCOM Ordnance Training (http://www.cascom.army.mil/ordnance/) and the USAOCS (http://130.114.88.10) home pages.

The intended audience of the manual includes—

- Combat and combat support commanders—to give them a more universal understanding of how maintenance support operations are organized and provided.
- CSS commanders and staffs—to inform them on the integration of maintenance support operations into the CSS and total Army missions.
- Soldiers and students—to give them a broad knowledge of the maintenance support operations structure and how it works.

The proponent of this publication is HQ TRADOC. Send comments and recommendations on DA Form 2028 directly to Commander, USACASCOM&FL, Training Directorate, ATTN: ATCL-AO, 401 1st Street, Suite 227, Fort Lee, VA 23801-1511.

NOTE: Unless otherwise stated, the masculine gender in this manual refers to both men and women.

Chapter 1

Fundamentals

Global interdependence, reduced time, and fast-changing technology affect every aspect of how the Ordnance Corps must do business today and into the twenty-first century. In a force-projection Army, maintenance elements are increasingly required to anticipate, analyze, and tailor available resources for effective, timely support of complex weapon systems. Today's focus on adaptive planning to provide increased options for decision makers is prompting maintenance managers to embrace change, innovation, and flexibility at all levels. Success will continue to be based on the bottom-line measurement of how well our customers' equipment remains operational (availability), how quickly it can be returned to service when it becomes inoperable (maintainability), and how long the user can anticipate failure-free performance (reliability). Sustaining decisive land force dominance through synchronized maintenance operations will challenge commanders at all levels. They must understand customer requirements, the overall support concept, and the Army maintenance system to have the right capabilities in the right place at the right time.

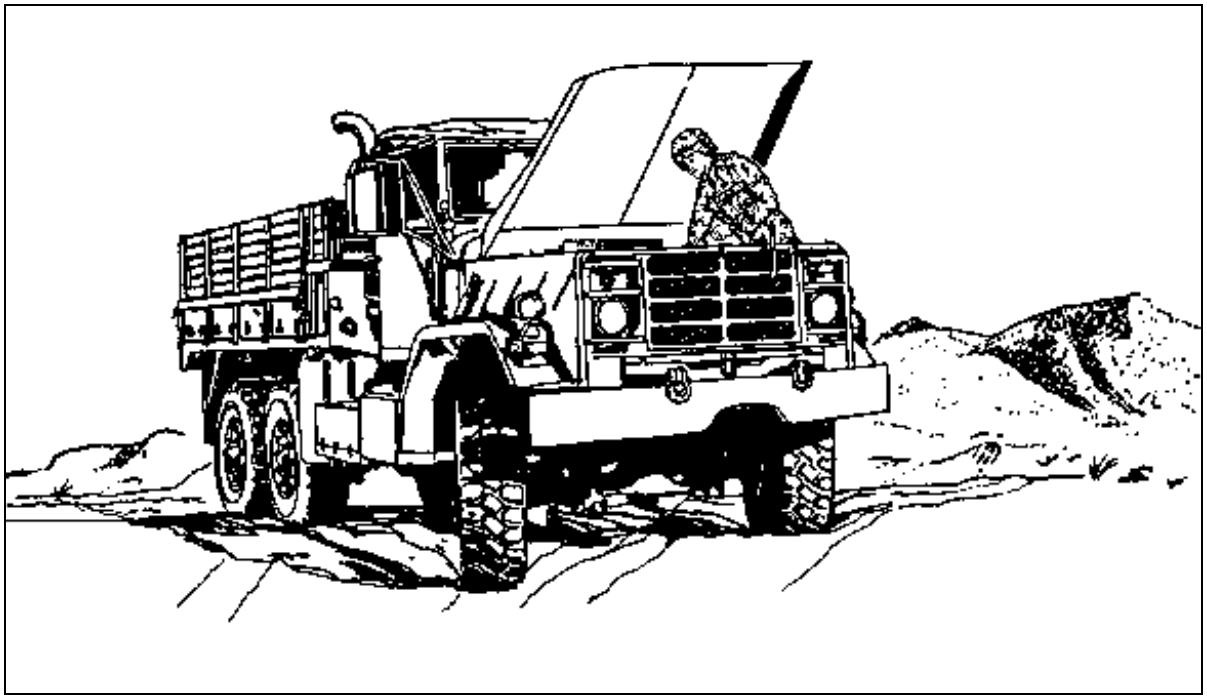

SECTION I – MAINTENANCE

1-1. Maintenance is one of the six combat service support functions that support soldiers and their systems in the field. It sustains materiel in an operational status, restores it to serviceable condition, or upgrades its functional utility through modification or product improvement. The Army maintenance system designates the scope of tasks performed by maintenance activities. It provides support planning requirements for maintenance of materiel systems when fielded and after fielding, and it establishes requirements for managing activities that physically perform maintenance.

1-2. Maintenance levels form the baseline for determining which specific maintenance tasks are assigned to each level. They are a means to select the scope of maintenance and the skill levels necessary for units and activities at various command levels.

1-3. Maintenance tasks include any action that retains or restores materiel to a fully mission-capable condition. Tasks range from simple preventive maintenance checks and services (PMCS) of equipment to complex depot operations performed in fixed shop facilities. The maintenance allocation chart remains the primary tool for assigning tasks.

THE ARMY MAINTENANCE SYSTEM

1-4. Effective management of the Army maintenance system depends on a smoothly functioning organization from the national to the unit level. Highly complex maintenance operations are performed at depot level while units perform simple PMCS operations.

MAINTENANCE LEVELS

1-5. The Army maintenance system, less aircraft, consists of a flexible, four-level system (Figure 1-1). Each unique level makes a different contribution to the overall system (Figure 1-2).

MAINTENANCE LEVEL	CATEGORY
Unit	Operator/crew Operator/Maintainer Organizational
Direct Support (DS)	Direct Support
General Support (GS)	General Support
Depot	Depot

Figure 1-1. The Four Levels of Maintenance

LEVEL OF MAINTENANCE	DESCRIPTION
Unit	• Foundation of the maintenance system; requires continuous emphasis by commanders. • Repairs made by operator/crew as well as mechanics assigned to organization. • Operator/crew is cornerstone; they perform PMCS IAW applicable operator's series (-10 level) technical manual (TM). • TM 20-series PMCS tables used to perform scheduled PMCS services to sustain and extend combat-capable life of equipment. • Repairs on certain equipment completed by operator/maintainer. Operator performs checks, services, and maintenance prescribed in both -10 and -20 level TMs.
DS	• One-stop service to supported customers. • Highly mobile, weapon-system-oriented maintenance. • Backup support to unit-level maintenance. • Repair and return to the user. • Support provided to dedicated customers or on area basis.
GS	• Commodity-oriented repair of components and end items in support of theater supply system. • Backup maintenance support to DS units. • Job shop/bay or production line operations with capability to task/organize to meet special mission requirements. • Located at echelons above corps (EAC). **NOTE**: Based on METT-TC, platoon/team-size elements can be found as far forward as required to support the tactical situation.

Figure 1-2. Maintenance Level Descriptions

LEVEL OF MAINTENANCE	DESCRIPTION
Depot	• Maintenance performed by tables of distribution and allowances (TDA) industrial-type activities operated by the Army. • Provides combat-ready materiel to the Army supply system. • Repairs and returns to wholesale supply system at national level or, by exception, to theater of operations. • Provides technical support and backup to DS and GS maintenance units. • In wartime, "warfighter Commander in Chief " (CINC) assumes control of depot-level maintenance operations in theater of operations.

Figure 1-2. Maintenance Level Descriptions (Continued)

NOTE

While these are distinct levels, there is flexibility built into the system due to overlapping capabilities. Maintainers do not lock themselves into rigid levels of maintenance. When mission, enemy, terrain, troops, time available, and civilian considerations (METT-TC) permit, maintainers at the various levels may also repair selected components to eliminate higher echelon backlogs and maintain technical skills.

FORCE XXI AND BEYOND…

Maintenance XXI consolidates the current four levels of maintenance into two levels–field and sustainment.

Field maintenance combines the organizational and direct support levels of maintenance. Field maintenance includes those tasks that are performed "on-system" at the point of breakdown or the point of repair (maintenance collection point). At this level of maintenance, operators and maintainers fix vehicles through the replacement of major system components. Field maintenance is generally performed by soldiers and maintainers assigned to the TOE units. However, when authorized, contractors may provide field maintenance support for low-density, highly technical, cost-prohibitive systems.

Sustainment maintenance combines the general support and depot levels of maintenance. Additionally, sustainment maintenance includes some direct-support-level maintenance tasks. Sustainment maintenance consists of those tasks that are normally performed "off-system." At this level of maintenance, maintainers focus on the repair of component items and their return to the distribution system. Component repair includes items such as major assemblies (engines, transmissions, etc), line-replaceable units (LRUs), and reparable-type items (starters, generators, fire control, etc). Sustainment maintenance can be performed by corps and theater maintenance activities, special repair activities (SRAa), or by contractors on the battlefield. The theater sustainment maintenance manager coordinates and workloads sustainment maintenance activities.

LEVELS OF WAR

1-6. Coordination of maintenance operations occurs at all levels of war (Figure 1-3 describes how the four levels of maintenance overlay the levels of war):

- Strategic. Maintenance operations are largely the purview of the depot maintenance level in concert with the continental United States (CONUS) based industrial and civilian sector. Maintenance management primarily links the nation's economic base (people, resources, and industry) to its military operations in theaters.
- Operational. Maintenance operations link strategic capabilities to tactical requirements. Managers coordinate DS and GS maintenance, specialized/forward repair activities, and base logistics operations. At this level, the maintenance system both drives and supports the supply system. DS maintenance works to meet tactical requirements, while GS maintenance provides commodity-oriented repair of

components and end items to support the theater supply system. The primary focus is to maximize the number of operational combat systems available to support the tactical battle.

- Tactical. Maintenance operations consist of activities required to keep weapon systems operational during battle, supporting the tactical commander's scheme of operation. Managers oversee operator/crew, unit, and DS maintenance operations. The primary focus is equipment repair or replacement and return to user.

LEVEL	UNIT	DIRECT SUPPORT	GENERAL SUPPORT	DEPOT
WHO	• Operator • Crew • Unit maintenance personnel • Operator /Maintainer	• DS maintenance units • Installation support maintenance shops • Host nation support	• GS maintenance units • Specialized repair activities (SRAs) • Installation support maintenance shops • Host nation support	• Predominately Army Materiel Command (AMC) • Commercial contractors • Host nation support
WHERE	• Breakdown site • Equipment location • Unit maintenance areas • Unit maintenance collection point (UMCP)	• Mobile maintenance shops • Fixed shops in installations/ units • Equipment location/ breakdown site/ UMCP • Division, corps, and EAC maintenance collection points (MCPs)	• Fixed/semi-fixed maintenance facilities • Installation maintenance shops • Equipment location • EAC	• Fixed plant-type facilities • On site, on exception • CONUS and selected theaters
WHAT	• PMCS • Inspections by sight and touch • Lubricating, preserving, cleaning, replacement, and minor adjustments authorized by maintenance allocation chart (MAC) • Diagnosis and fault isolation per MAC	• Diagnose and isolate components and assembly malfunctions • Adjust, calibrate, and align components and assemblies • Replace components, modules, assemblies, and piece parts • Repair defective end items and components	• Diagnose and isolate equipment components and assembly malfunctions to the internal piece level • Adjust, calibrate, align, and repair components and assemblies • Repair/modification of end items/ components and assemblies to the internal piece part level (overhaul)	• Overhaul of components and end items • Repair end items, components, assemblies, and modules to original manufactured tolerances/ specifications (rebuild) • Repair requiring special environmental facilities • Nondestructive testing • Cyclic overhaul and special maintenance programs

Figure 1-3. Maintenance Level Information

LEVEL	UNIT	DIRECT SUPPORT	GENERAL SUPPORT	DEPOT
WHAT	• Replacement of unserviceable parts, modules. and assemblies per MAC • Fault verification and level of repair • Requisition, receipt, storage, and issue of repair parts (PLL) • Recovery and transport operations • Battle damage assessment and repair (BDAR) • Army Oil Analysis Program (AOAP) • Reporting material readiness per AR 700-138	• Operate repair parts supply reparable exchange activity (RXA) • Recovery • Light body repairs • Technical assistance • BDAR • Apply DS-level modification work orders (MWOs) • DS-level repair /issue operational readiness float (ORF) • Reinforce support to unit level maintenance • Provide maintenance support teams (MSTs) • Estimated cost of damages (ECOD) support • Repair parts supply (shop stock)	• Heavy, body, hull, turret, frame repair • Collection and classification of unserviceable Class VII • Evacuate disposable material • Technical assistance • Backup support to DS units • Operation of cannibalization point • Mobile MSTs • GS-level repair of ORF • Limited recovery	• Manufacture of parts not otherwise available • Technical assistance • Reinforcing support to DS and GS units • Wholesale-level reparable exchange • Restoration • Conversion • Renovation • Parts fabrication • Modification of serviceable assets • Restoration of unserviceables to prescribed levels of serviceability • Inspections/modifications requiring extensive disassembly or elaborate test equipment
WHY	• Support user unit's materiel readiness	• Support using unit materiel readiness	• Support theater supply system by repair and return to supply stocks • Support of local supply stocks, ORF stocks of DS units, and repair and return to user programs	• Support of Army/theater supply inventory by repair and return to supply stocks • Support of user unit's materiel readiness with repair cycle float

Figure 1-3. Maintenance Level Information (Continued)

NOTE

Elements from GS- and depot-level activities can be found as far forward as required to support the tactical situation.

SUSTAINMENT MAINTENANCE SUPPORT

1-7. Sustainment maintenance is generally performed above the DS level. It consists of active and reserve GS maintenance units, directors of logistics (DOL), depots, special repair activities (SRAs), forward repair activities (FRAs), and contractors, who can be tailored to meet sustainment maintenance demands anywhere in the world. It is integrated management that focuses on centralized management with decentralized execution of maintenance programs at local, regional, and national levels. It maximizes repair capability while providing high levels of weapon system availability at the least cost.

1-8. Centers of excellence (COE) are established for sustainment activities to determine how maintenance units can best support the theater operations plan. COE support the theater supply system through TOE or TDA units, host nation support, and contract personnel.

LOCAL SUSTAINMENT MAINTENANCE MANAGER

1-9. The local sustainment maintenance manager (LSMM) workloads sustainment maintenance units and activities in a designated geographical area that could be at multiple maintenance centers. There may be situations where an LSMM operation is established in an overseas theater of operations as part of the logistics support element (LSE).

REGIONAL SUSTAINMENT MAINTENANCE MANAGER

1-10. The regional sustainment maintenance manager (RSMM) at a designated geographical area has the authority to prioritize or redirect workload among the LSMMs. Depending on the extent of support required, an RSMM operation may be established in an overseas theater of operations as part of LSE support.

NATIONAL SUSTAINMENT MAINTENANCE MANAGER

1-11. The national sustainment maintenance manager (NSMM) integrates sustainment maintenance for the total Army. The NSMM develops and implements policies and procedures to provide optimal sustainment maintenance support to the full spectrum of total Army missions. The NSMM also participates in developing and integrating the LSE. Support is provided in a seamless process transparent to the user.

LOGISTICS SUPPORT ELEMENTS

1-12. Logistics support elements—

- Generally move into fixed or semifixed facilities in the theater, where they remain for the duration of operations.

- Can displace forward, though in a very time-consuming, labor-and equipment-intensive process. However, they can deploy platoons, sections, or teams as far forward as required to support the tactical situation.
- Are attached, when deployed forward, to the nearest maintenance company; all requirements pass through that headquarters.

MAINTENANCE ALLOCATION CHART

1-13. The maintenance allocation chart designates overall authority and responsibility for the performance of maintenance functions on an item of equipment. Figure 1-4 shows a maintenance allocation chart. Figure 1-5 describes the MAC's six columns.

MAINTENANCE ALLOCATION CHART

1 Group Number	2 Component Assembly	3 Maintenance Function	4 *Maintenance Level C	O	F	H	D	5 Tools and Equipment	6 Remarks
05	COOLING SYSTEM CONT								
0505	Fan Tower Assembly	Inspect		0.2					
		Test		0.2					
		Replace			0.3				A
		Repair		4.5				35	
		Overhaul				**		37	
06	ELECTRICAL								
0601	Alternator	Inspect		0.2					
		Test		0.2					B
		Replace		2.0					
		Repair			8.0				
		Overhaul				**			
0602	Voltage Regulation	Inspect		0.2					
		Test		0.2	0.2				
		Replace		2.0					
		Repair			1.0				
		Overhaul							
0603	Motor Starting	Inspect		0.2					
		Test		0.2					
		Replace		2.0					
		Repair			2.4			48	
		Overhaul				**			

***Worktimes are included in DMWR*

*C Operator or crew
O Organizational
F Direct support maintenance
H General support maintenance
D Depot maintenance

Figure 1-4. Maintenance Allocation Chart

Column 1 - Group Number	Lists group numbers, which identify components, assemblies, subassemblies, and modules with the next higher assembly.
Column 2 - Component/ Assembly	Contains noun names of components, assemblies, subassemblies, and modules for which maintenance is authorized.
Column 3 - Maintenance Function	Lists functions to be performed on items in Column 2. Maintenance functions are limited to, and defined as, those listed in Figure 1-6.
Column 4 - Maintenance Level (Four levels of maintenance with specific tasks divided into five maintenance categories)	Specifies the lowest level of maintenance authorized to perform the function listed in Column 3. Listing a work-time figure in the proper subcolumn does this. The work-time figure represents the man-hours required to perform the function. The number of man-hours specified is the average time required to restore an item to use under field operating conditions, which includes preparation, troubleshooting, and technical inspection/quality control time in addition to the time required to perform the specific task.
Column 5 - Tools and Equipment	Names by code the common tool sets, special tools, and test/support equipment required to perform the designated function.
Column 6 - Remarks	Lists references to the page at the end of the MAC.

Figure 1-5. MAC Columns

LOCATION

1-14. The MAC is found in equipment technical manuals that contain unit-level (-12, -13, -14, -20, 23, and -24) maintenance procedures. Some recently fielded, highly complex weapon systems have separate manuals for the MAC. In those instances, the technical manual has the same first eight digits as other series technical manuals, followed by "MAC." For example, the MAC for the M1 tank is TM 9-2350-255-MAC.

OBJECTIVES

1-15. The Army maintenance system is organized to service and repair equipment throughout its in-service life. Organizations are tailored to provide the required equipment maintenance capability at appropriate levels throughout the maintenance system.

1-16. To ensure balance in the maintenance system, it is important that the responsibilities of each maintenance level be kept in perspective. It is a tactical necessity for user units to perform preventive maintenance. However, users are not expected to perform support or depot maintenance.

FUNCTIONS

1-17. Maintenance functions are defined in Figure 1-6.

Title	Description
Inspect	To determine the serviceability of an item by comparing its physical, mechanical, or electrical characteristics with established standards through examination.
Test	To verify serviceability by measuring the mechanical, pneumatic, hydraulic, or electrical characteristics of an item and comparing with prescribed standards.
Service	To perform maintenance required periodically to keep an item in operating condition.
Adjust/Align	To maintain or regulate an item, within prescribed limits, by bringing it into proper or exact position or by setting the operating characteristics to specified parameters.
Calibrate	To determine corrections and cause them to be made or to make adjustments on instruments or test, measurement and diagnostic equipment (TMDE) used in precision measurement.
Remove/Install	To remove and install the same type of item. Could also occur separately (e.g., modification work order [MWO], installation kit, but nothing removed).
Replace	To remove an unserviceable item and install a serviceable counterpart in its place. (Could refer to fluids, e.g., oil.).
Repair	To perform maintenance required to correct material damage and to restore an item to serviceability standards.

Figure 1-6. Maintenance Functions

Title	Description
Overhaul	To restore an item to a completely serviceable/operational condition as required by maintenance standards in appropriate technical publications.
Rebuild	To restore unserviceable equipment to a like-new condition IAW original manufacturing standards. Rebuild is the highest degree of materiel maintenance applied to Army equipment.

Figure 1-6. Maintenance Functions (Continued)

SECTION II – MAINTENANCE SUPPORT

1-18. Maintenance support is a flexible, decentralized operation (maintenance execution) capable of keeping up with shifts in operational tempo. Centralized control (maintenance management) provides maximum resource use to accomplish the mission. The maintenance support concept focuses on sustaining operations by maximizing equipment availability to the force-projection Army. It strives to create a seamless system operating across strategic, operational, and tactical levels, interweaving and mutually supporting all levels of maintenance for maximum effectiveness. Maintenance support requires continuous coordination with customer units to tie the soldier in the field to the national level. The emerging operational concept for maintenance embraces requirements and capabilities in an interlocking scheme of maintenance support from the breakdown site to the CONUS base.

1-19. Operations in peacetime and in combat place heavy demands on equipment. Weapon systems and other equipment are subject to severe use. A tank that will not move is a definite liability to the tactical commander. A radio that does not work can cause a breakdown of communications that could result in the loss of lives. The link between the using organization and maintenance support is a trained operator/crew who can properly use and maintain the equipment. Though time is limited, the continued availability of equipment demands that the operator/crew perform PMCS.

1-20. The cornerstones of maintenance support are the tenets, "fix forward" and "anticipate support." Repairing equipment far forward enhances the ability to quickly return the maximum number of combat systems, at the earliest opportunity, as close to the using unit as possible. Anticipating future requirements allows prepositioning of maintenance support capabilities. Anticipation rests on the ability to foresee future operations and to identify, accumulate, and maintain the assets, capabilities, and information required to support them.

FORCE XXI AND BEYOND…

Replace Forward and Repair Rear: Replacing line-replaceable units or modules instead of attempting to repair them, leveraging advanced prognostics and diagnostics tools, support equipment, and training. The line-replaceable units or modules are then retrograded to higher levels of maintenance for repair and return to the distribution system.

Force XXI field maintenance operations are characterized by lean, modular, and enabled maintenance units focused on maximizing combat power. The velocity at which future field maintenance operations must be performed, Force XXI distributed operations, the capabilities of battlefield distribution, and expected gains in diagnostics and prognostics facilitate our ability to fix equipment forward through replacement of LRUs or component assemblies.

Replace Forward means a soldier performs "on-system" maintenance. "On system" refers to replacing components or subcomponents at the point of repair, the breakdown site, or the UMCP. Maintainers normally diagnose down to the major component failure. They then replace that component and return the system to operational condition. Based on METT-TC, the soldier may diagnose and replace subcomponent items depending on the availability of tools, parts, and time. An example of a replace function is the replacement of a full-up power pack (FUPP). If a serviceable FUPP is available, the maintainer replaces the major assembly. If the FUPP is not available, the maintainer might swap out a serviceable engine from an unserviceable FUPP with a bad transmission.

Repair Rear means that soldiers perform "off-system" maintenance. "Off system" refers to those actions taken to return components and subcomponents of weapon systems to serviceable condition. These repair actions take place at designated places throughout the battlefield. Corps maintenance units may have the capability to repair certain LRUs or assemblies for major weapons systems they support. Corps component repair companies or special repair activities in the corps or theater area repair other components and assemblies as determined by sustainment maintenance managers. An example of a repair function at the corps or theater level is the rebuild of a tank engine or other major assembly.

1-21. Leaders must tailor and position maintenance support to provide quick, mobile responses to changes in units and weapon systems. Maintenance managers must coordinate the best use of available resources to repair and return the maximum number of critical items. They must maintain close, consistent interaction between maintenance organizations and their supply support activities to ensure quick access to repair parts. Support elements must perform maintenance work as far forward as practical within the limitations of METT-TC and the commander's priorities.

FORCE XXI AND BEYOND…

Combined Organizational/Direct Support-Level Maintenance for the Maneuver Task Force: Unifying organizational- and DS-level maintenance responsibilities and capabilities into one organization, the Division XXI Forward Support Company, to focus maintenance leadership, management, technical expertise, and assets under a single logistics operator. This ensures maintenance can be planned, allocated, and swiftly executed when and where needed in order to satisfy the commander's requirements.

Efficiency in maintenance management and effectiveness of maintenance operations are maximized when organizational- and DS-level maintenance operations are consolidated into one organization. This concept eliminates the loss of time and job continuity associated with the transition of organizational-level job orders to direct support job orders and vice versa. Consolidated maintenance gives maintenance managers the flexibility to dispatch more effective maintenance teams forward because of centralized control over and access to more capability. The concept brings maintenance assets under a single logistics operator for maintenance, the maintenance control officer. It also brings together maintenance leadership and management so that maintenance support is planned, resourced, and executed when and where needed with a unified focus supporting a common mission and objective.

Enablers such as the multicapable maintainer (MCM), forward repair system (FRS), and advanced diagnostics and prognostics give the combat repair teams (CRTs) the ability to execute this concept. The CRTs have the right people with the right tools and test equipment to provide field maintenance forward on the battlefield and rapidly return combat systems to the fight.

1-22. Recovery assets move inoperable equipment to a designated location (unit maintenance collection point) or to a maintenance activity best suited to perform the repair. Maintenance activities may evacuate equipment to another maintenance activity in order to balance the workload of forward elements so that they can meet new requirements.

METHODS

1-23. The four methods of support used by maintenance organizations are—

- Forward support.
- Area support.
- Backup/Reinforcing support.
- Passback support.

Figure 1-7 gives a brief description of each method.

Method	Description
Forward Support	• Maintenance oriented toward quick turnaround to the user in order to maximize operational time by minimizing repair and evacuation downtime. • End item repair thrust as ***far forward*** as possible within tactical time criteria, or recovered and evacuated to the point where repair can be made. "Fix forward" remains the preferred maintenance concept.
Area Support	• Maintenance resources concentrated in a ***defined geographic area*** based on type and quantity of equipment supported. • Focus placed on supporting units operating in or moving through defined geographic boundaries.
Backup/Reinforcing Support	• Customer backup support provided to supported unit for excessive maintenance requirements that cannot be performed due to time or resource limitations.

Figure 1-7. Description of Support Methods

Method	Description
Backup/Reinforcing Support (continued)	• Backup support provided to like maintenance unit for temporary excessive requirements that must be performed to meet operational readiness needs.
Passback Support	• Passback support provided by one maintenance unit to a supported maintenance unit. This requirement is a predictable and permanent maintenance workload that is allocated by force structure.

Figure 1-7. Description of Support Methods (Continued)

MANAGING BATTLEFIELD MAINTENANCE

1-24. When requirements have been identified, the maintenance manager must identify the resources on hand and those already committed. Available resources are then managed within the established support framework to return the maximum number of items to fully mission-capable status.

1-25. When a shift or change in priorities could provide a greater overall return, the maintenance manager takes appropriate action or makes recommendations through the chain of command. Although a maintenance planner may not formally lay out a management matrix as such, a mental estimate of these factors is necessary. Figure 1-8 shows the basic concept for managing maintenance support on the battlefield.

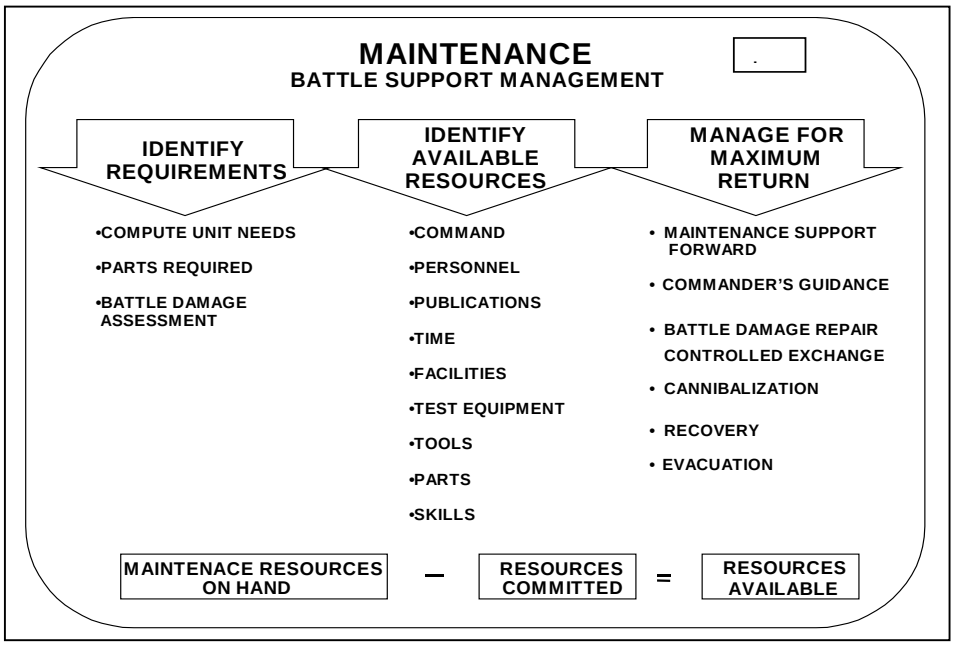

Figure 1-8. Managing Battlefield Maintenance Support

BATTLE DAMAGE ASSESSMENT AND REPAIR

1-26. BDAR is used to inspect damaged equipment to determine the extent of damage, to classify the equipment according to the type of repairs required, and to develop a plan of action for each item. Priorities for repair of battle-damaged systems are as follows:

- Most essential for completion of the immediate mission.
- Can be repaired in the least amount of time.
- Reparable but not in time to continue the immediate mission.

NOTE

Equipment that is damaged beyond repair becomes a candidate for cannibalization.

1-27. BDAR uses emergency expedient repairs, as outlined in BDAR technical manuals, to return the system to fully or partially mission-capable status. Under combat conditions, BDAR may be performed on fueled or armed systems. The commander may also waive other precautions. All operations must be conducted as safely as possible.

ORGANIZATIONAL FLEXIBILITY

1-28. Maintenance managers must be aware of changing support requirements and must tailor maintenance resources to ensure support is provided as required. This tailoring encompasses adding or removing resources, such as personnel and equipment, to meet mission requirements and to best support the tactical commander's intent. Restructuring company maintenance teams (CMTs) or requesting maintenance support team (MST) assistance from supporting maintenance units should be done as required.

REPAIRS AND RECOVERY

1-29. To maximize unit combat readiness, equipment must be repaired and returned to the user as quickly as possible. Repairs should be made as far forward as possible. As equipment in the corps and communications zone (COMMZ) is not always "forward," forward also means on site or at the supported unit's UMCP.

1-30. Recovery of equipment to maintenance collection points removes equipment from using units and increases the time it is not available. Repairing equipment as far forward as possible reduces transportation requirements and non-mission-capable time and increases equipment availability.

1-31. Commanders must ensure that the degree of maintenance performed is consistent with technical and tactical requirements. During combat, only maintenance needed to return equipment to mission-capable status is performed. This concentrates the maintenance effort on those areas that affect the outcome of the battle.

1-32. Non-mission-essential maintenance is deferred until after the battle. Sometimes a weapon or support system may contain redundant systems that enable it to operate even when one or more of them are damaged. Commanders may decide to keep a weapon/support system in the battle at reduced capability rather than lose it entirely while the inoperable system is repaired.

CENTRALIZED MANAGEMENT OF DECENTRALIZED OPERATIONS

1-33. Maintenance managers at all levels must maintain control over their respective maintenance operations even though the support is decentralized. This provides support as far forward as possible and focuses available maintenance resources on the work to be done.

MANAGER RESPONSIBILITIES

1-34. Managers must be aware of both the maintenance workload and available resources in order to make necessary maintenance support decisions. Since the situation may change rapidly, information must be as near real time as possible. Managers must direct the use of maintenance resources or shift the workload to the maintenance elements best suited to make the repair. They should avoid having damaged equipment awaiting repairs in one area of the battlefield while maintenance personnel are idle in another. Managers must create a flexible maintenance environment so that resources and workloads can cross various command boundaries.

REPORTING SYSTEMS

1-35. Accurate reporting is the link between decentralized operations and centralized management. The measure of success of a maintenance manager is based on the ability to manage maintenance operations to maintain desired operational readiness standards. The Unit-Level Logistics System-Ground (ULLS-G) performs The Army Maintenance Management System (TAMMS) functions at the unit maintenance level. The Standard Army Maintenance System (SAMS) provides maintenance managers with an automated management information system that can assist them in managing DS maintenance operations.

1-36. For additional guidance, maintenance managers should refer to Training Circular (TC) 43-4.

FORCE XXI AND BEYOND…

The Army is currently developing a seamless, interoperable system that consolidates the current stovepipe management information systems. Global Command Support System–Army (GCSS-Army) integrates and standardizes the format for data entry used by current Army systems. GCSS-Army also standardizes communication protocols. GCSS-Army consists of multiple modules that interface with each other. The modules related to ordnance maintenance operations are listed below:

Maintenance Module (MNT):

GCSS-Army combines the functions of the current ULLS-G, ULLS-A, and SAMS-1 systems into a single maintenance module. This module manages workload and coordinates repair services, provides applicable financial information, reports maintenance status, and performs TAMMS records management. The module will also leverage emerging technologies to support split-base operations and increased mission support requirements. The module has the capability to process Class IX supply requisitions.

Management Module (MGT):

GCSS-Army will integrate the capabilities currently found in the SARSS-O ILAP, the maintenance management reporting performed by SAMS-2, and the planning and management functions developed for ULLS-S4 (logistics estimates, CSS planning and management-type functions, and unit status reporting). The MGT module will allow users the ability to access required CSS data from a single database and make decisions using that data.

Integrated Management Module (IMM):

GCSS-Army integrates the functionality of SAAS-Mod, SPBS-R, SARSS-2A, SARSS-2AC, SARSS-B, SARSS-Gateway, and SAMS-2. This integration produces a package of functions for use by sections within materiel management centers at all levels.

Chapter 2

Maintenance Organizations

Chapter 2 describes the battlefield layout of Army units in an operational theater. The theater of operations is divided into two major areas:

- Communications zone. The area that begins at the corps rear boundary and extends rearward to include the area needed to support the field forces.
- Combat zone. The area assigned to the combat forces, corps and divisions, to conduct operations. It is the operational area forward or closest to enemy combat forces and continues rearward to include the corps support elements.

This chapter also provides a summary of the mission and capabilities for selected CSS and maintenance units normally found in an operational theater.

SECTION I – ECHELONS ABOVE CORPS AREA

ARMY SERVICE COMPONENT COMMAND ORGANIZATIONS

2-1. The Army service component command (ASCC) has command and control of all Army units in the theater of operations. The Army service component commander is responsible for preparing, equipping, administering, and providing CSS to Army forces assigned to unified and specified commands. An ASCC has no set structure; its size and composition depend on the mission. Figure 2-1 shows a typical theater of operations. Figure 2-2 shows the typical organization of a theater army. The seven major commands in the ASCC that handle most combat service support (CSS) operations are—

- Theater army area command (TAACOM).
- Engineer command (ENCOM).
- Transportation command (TRANSCOM).
- Medical command (MEDCOM).
- Personnel command (PERSCOM).
- Theater finance command.
- AMC.

Of the seven major commands, only the TAACOM is multifunctional; the other six are functional commands.

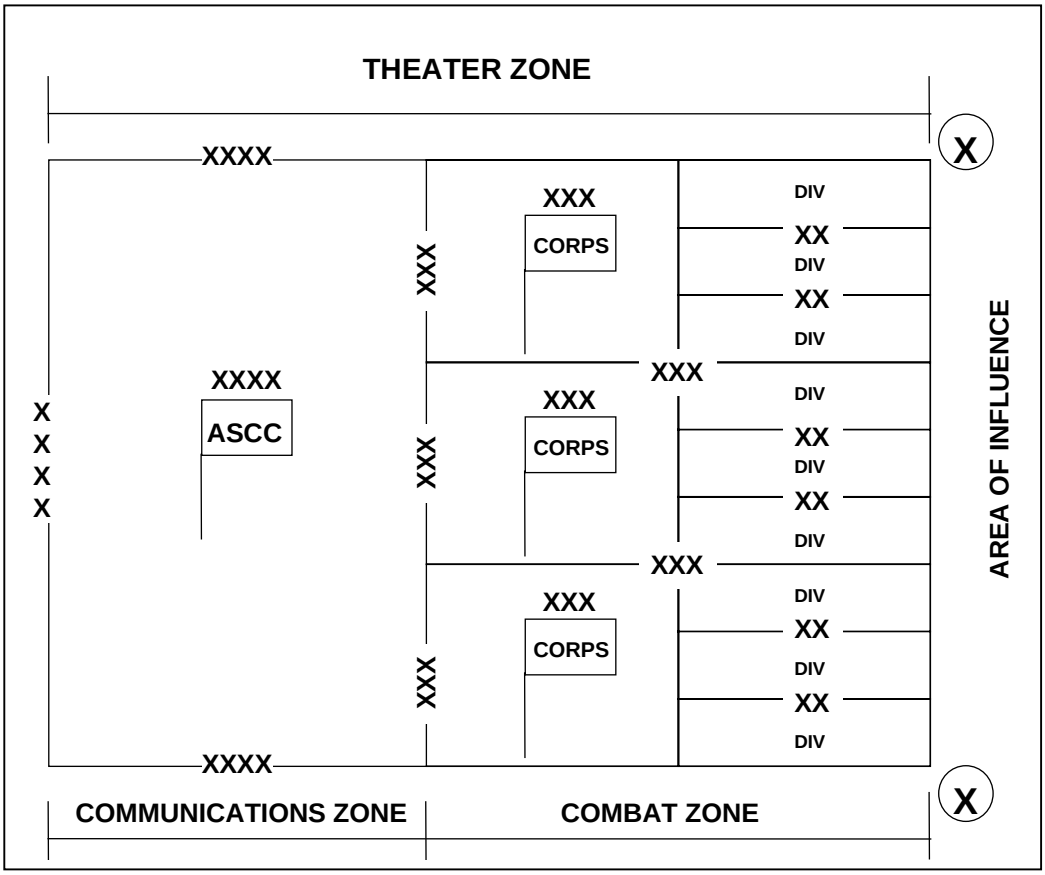

Figure 2-1. Typical Theater of Operations

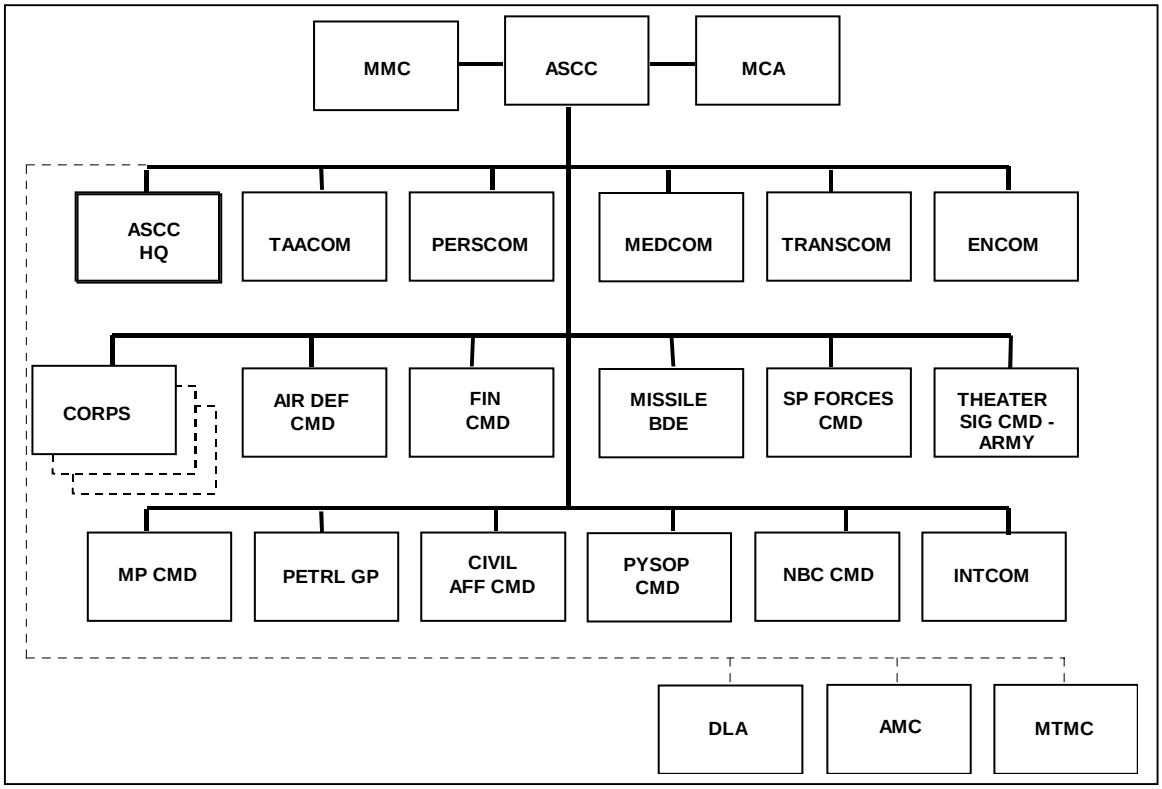

- - - - - PROPOSED OR POSSIBLE AUGMENTATION BASED ON REQUIREMENTS

Figure 2-2. Typical Army Service Component Command Organization

AREA MAINTENANCE AND SUPPLY FACILITY

MISSION

2-2. The AMSF provides logistical support for echelons above corps (EAC) nontactical communications and information systems used in an overseas theater.

CAPABILITIES

2-3. The AMSF may provide—

- Logistics support for any EAC communications or information system not specifically assigned to another command or agency for support.
- Support to the Defense Satellite Communications System (DSCS), Army-operated portion of the Defense DII, the American Forces Radio and Television Service (AFRTS), the Military Affiliate Radio System (MARS), and other theater-unique communications or command and control systems.

- Maintenance on information systems equipment specifically designated in the AMSF mission statement. Types of equipment repaired at the AMSF include, but are not limited to, the following:
  - Signal transmission systems—DSCS microwave, troposcatter, high frequency, satellite, special transportable systems, Non-Strategic Nuclear Forces command and control information ($NSNFC^3I$) systems, antennas, associated towers (except for major overhaul), and wire and cable systems (including fiber optic cable).
  - Automated communications systems—Defense Switched Network (DSN), automatic digital network (AUTODIN), electronic tandem switching centers, commercial off-the-shelf (COTS) data network equipment, COTS computers, and COTS auxiliary information processing equipment.

    NOTE: The AUTODIN system is currently being replaced by the Defense Message System (DMS).
  - Dial central facilities—electronic switching systems and telephone key systems.
  - Special activity communications equipment—radio and television, emergency action consoles, command control centers, and air traffic control equipment and systems.
  - Specified information management and processing equipment (IMPE)—automation and visual information equipment for strategic and sustaining base services.

ADDITIONAL CAPABILITIES

2-4. The AMSF may also provide support to other U.S. military departments, DOD activities, and government agencies or installations. Support is provided through interservice support agreements on a reimbursable basis.

BASIS OF ALLOCATION

2-5. Each theater of operations normally will have only one AMSF. Approval for the creation of an AMSF is given by the DA Deputy Chief of Staff for Logistics (DCSLOG). AMSFs are task-organized facilities. The structure of an AMSF depends on the support requirements of the theater. The size of the organization is based on the number of sites supported, their geographical dispersion, and the type of operational equipment located at each.

2-6. An AMSF may be operated directly by the Army, or it may be operated by a civilian contractor with Army oversight. An AMSF may be staffed by soldiers, Department of the Army civilians, U.S. civilians, or local national personnel.

2-7. Currently, two AMSFs are in operation: one in Europe, one in the Pacific. The AMSF-Europe (AMSF-E) is operated by a civilian contractor. It is staffed with U.S. civilians and local national personnel. The AMSF-E provides support for both DSCS and DII systems in England, Germany, Italy, and Southwest Asia. The AMSF-Pacific (AMSF-P) is operated directly by the Army and is staffed with a combination of military, Department of the Army

civilian, and local national personnel. The AMSF-P provides support for DSCS systems in both Japan and Korea.

2-8. Figure 2-3 is a diagram of a model AMSF. This model may be used as a guide for structuring support activities for specific requirements. Based on support requirements, all sections may not apply to every AMSF or additional sections may be required.

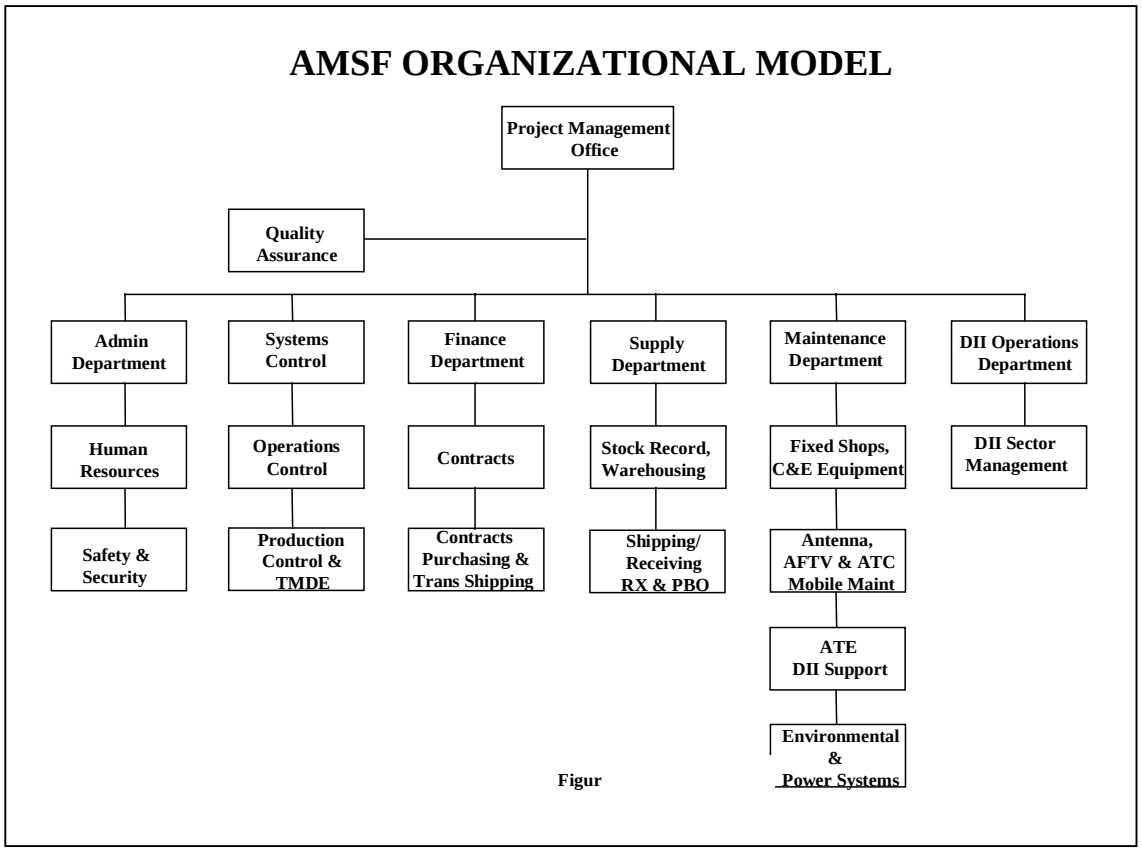

Figure 2-3. Model AMSF

THEATER SIGNAL MAINTENANCE COMPANY (SUSTAINMENT), ECHELONS ABOVE CORPS

MISSION

2-9. To provide dedicated sustainment maintenance and supply support for unique Tri-Tac, mobile subscriber equipment (MSE), computers, and conventional communications-electronics end items and components for three signal brigades within an echelons-above-corps Theater Signal Command—Army (TSC-A). In addition, the company performs specialized repair activity (SRA) component-level diagnostics and repair of selected circuit card assemblies (CCAs).

CAPABILITIES

2-10. This company has the following sustainment repair capabilities:

- Automated data processing (ADP) equipment, including teletype, TACCS, and associated peripherals.
- High-frequency communications equipment.
- Microwave equipment, including multichannel, tactical satellite, troposphere scatter, and fiber optic.
- Communications security equipment, including SRA support for selected controlled cryptographic items.
- Ground support equipment, including power generation units (PGUs) with outputs up to 200 kw, environmental control units (ECUs), forced air heaters, power-driven decontamination equipment, and gasoline engines.

NOTE

The TSMC provides this capability because the Theater Signal Command–Army (TSC-A), as an initial-entry deployer, depends on the immediate readiness of all ground support equipment to facilitate the critical theater signal mission.

ADDITIONAL CAPABILITIES

2-11. This company also provides—

- Command and control for three modular theater signal maintenance platoons.
- Class IX repair parts support for all mission-critical equipment organic to the Theater Signal Command-Army.
- COMSEC custodial functions, including materiel management, safeguarding, inventories, and cyclic reports.
- COMSEC logistical functions, including procurement, maintenance, and transport of COMSEC equipment and materiel.
- Organizational maintenance for all equipment organic to the TSMC.

NOTE

This unit provides dedicated sustainment support to a Theater Signal Command—Army

BASIS OF ALLOCATION

2-12. One theater signal maintenance company per Theater Signal Command—Army. The unit is typically attached to the HHD, Composite Signal Battalion, SRC 11626L000. Figure 2-4 shows the organizational structure of the Theater Signal Maintenance Company (Sustainment).

MOBILITY

2-13. This unit is 100 percent mobile.

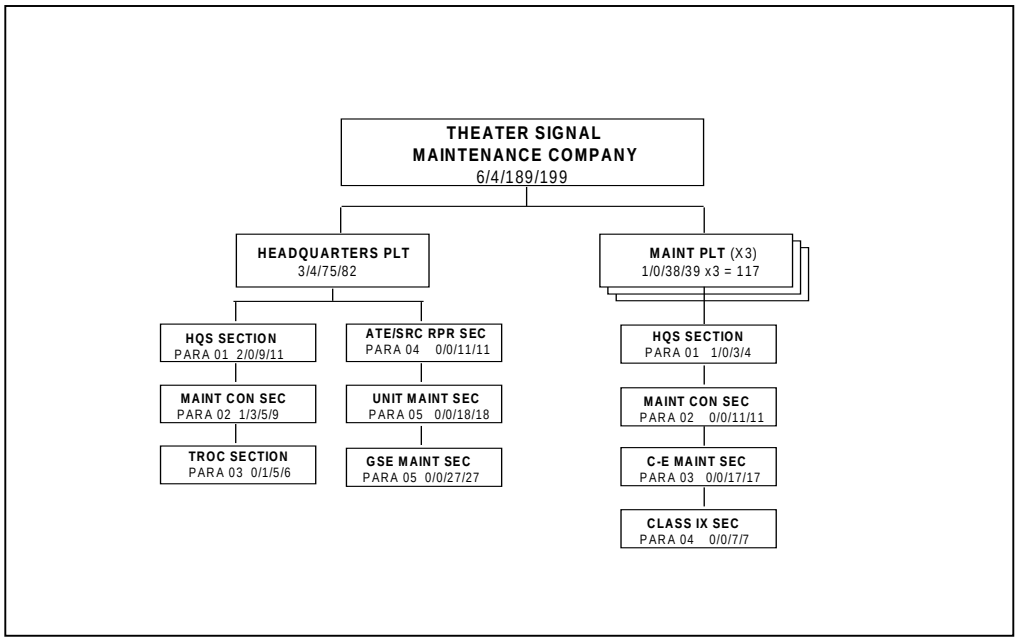

Figure 2-4. Theater Signal Maintenance Company (Sustainment)

FORCE XXI

FORCE XXI AND BEYOND…

The organization of the Theater Signal Maintenance Company (Sustainment) as described in the manual is the approved design resulting from the force design update process. The Ordnance Corps will be fielding these units as early as FY 2002.

TEST, MEASUREMENT, AND DIAGNOSTIC EQUIPMENT MAINTENANCE COMPANY

MISSION

2-14. The mission of a TMDE maintenance company is to provide area TMDE C&RS. The TMDE maintenance company accomplishes this overall mission by deploying mobile ATSTs throughout the theater of operations. The ATSTs maintain inherent DS/GS capabilities regardless of the area of deployment. The overall theater support mission encompasses C&RS of

TMDE-GP, selected TMDE-SP, and secondary reference-level (S-level) calibration functions provided by the area calibration laboratory (ACL) for assigned ATSTs.

STRUCTURE

2-15. The thrust of TMDE maintenance support is to perform C&RS, identify requirements, determine repairs, and set priorities. The TOE support structure revolves around the establishment of a TMDE maintenance company composed of associated augmentation teams. Figure 2-5 shows the TMDE maintenance company structure.

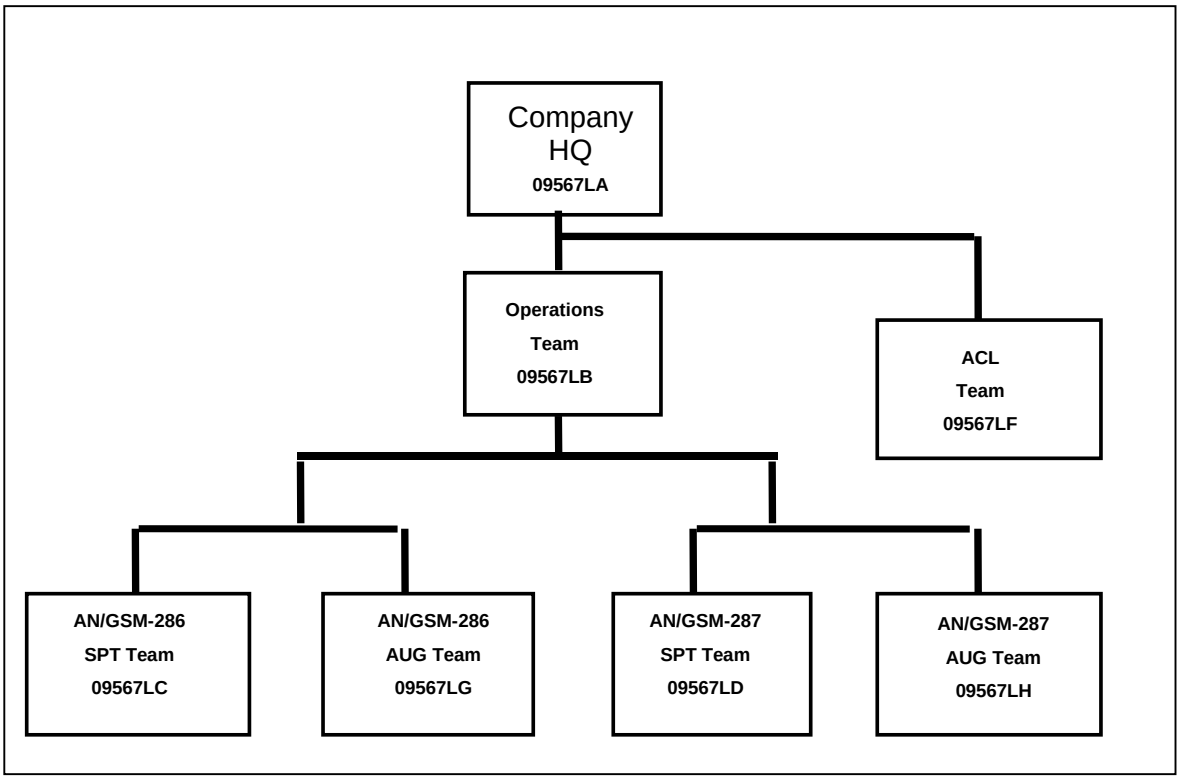

Figure 2-5. TMDE Maintenance Company

2-16. All elements of the combat service support TMDE maintenance company are considered Category II units or elements. TO&E 09567LA identifies the basic headquarters team. Additional teams (09567LB through LH) are required to make up the overall company and provide the personnel and equipment needed to accomplish the TMDE mission.

DESIGN

2-17. The category and densities of supported TMDE and the geographic dispersion of supported units determine the type and number of teams that constitute a TMDE maintenance company. This approach allows for flexible,

judicious deployment of support assets, company headquarters, operations section, ATSTs, and ACL.

2-18. Assembling teams to form a full-up TMDE maintenance company will not result in a centralized location of company elements, specifically ATSTs. Most ATSTs will collocate with their units of attachment throughout the theater. TMDE maintenance company headquarters elements will generally collocate at theater level with materiel management center headquarters company at the theater level. At division level an ATST is attached to the main support battalion (MSB).

2-19. Deployed TMDE maintenance company elements depend on a host unit for Class IX supply support, logistical support, and administrative services like food, medical, financial, legal, vehicle, and generator maintenance support. The TMDE maintenance company headquarters—

- Provides command and control for teams located with the TMDE maintenance company headquarters.
- Is normally attached to the MMC headquarters company at the theater level for soldier support functions, such as—
  - Logistical support.
  - Food.
  - Religious services.
  - Legal services.
  - Combat health support.
  - Financial services.
  - Personnel administration.

Company Headquarters

2-20. The company headquarters is responsible for the command and control of ATSTs. It performs traditional company-level administrative functions, including establishing and coordinating support agreements with those units where ATSTs are attached.

Operations Team

2-21. The operations team, located in the corps and attached to a COSCOM MMC, plans, programs, supervises, and coordinates the technical operations of the TMDE maintenance company's C&RS mission. Functions of the operations team include—

- Ensuring calibration of secondary reference and secondary transfer standards at prescribed intervals and with required accuracy.
- Ensuring timely reporting and receipt of calibration and repair measurement data.
- Monitoring the accuracy of TIMMS-generated instrument master record file (IMRF) for supported units' TMDE; coordinating any changes with USATA.
- Assisting the ACL and ATSTs with Class IX repair parts issues.
- Determining funding requirements for interservice support agreements for C&RS.

- Preparing operational and contingency plans.
- Maintaining a technical publications library.
- Developing on-the-job training (OJT) programs; monitoring training performance.
- Coordinating requirements for transportation of personnel and equipment.
- Providing a radiological protection officer (RPO) for the TMDE maintenance company.

Quality Assurance Section

2-22. As part of the operations team, the QA section—

- Ensures TMDE QA is implemented IAW the USATA QA program.
- Performs on-site visits to ATSTs to ensure compliance with the QA program.
- Visits supported units to discuss TMDE C&RS support.
- Inspects the ACL for proper environmental and safety conditions.

Area Calibration Laboratory Team

2-23. The ACL is located with the TMDE maintenance company headquarters, housed in an environmentally controlled fixed structure. The ACL is not mobile. It operates and maintains the secondary reference measurement standards (S-level). It provides C&RS on standards requiring S-level calibration, particularly the secondary transfer standards belonging to the TMDE maintenance company ATSTs. To accomplish its mission, the ACL—

- Maintains the accuracy of measurement standards with traceability through the USAPSL to the National Institute of Standards and Technology (NIST).
- Performs S-level C&RS on the ACL, ATST, and their supported unit's TMDE, as identified in TB 43-180.
- Performs administrative functions concerning production status, management reports, and scheduling of C&RS. The ACL utilizes TIMMS in performing these and other functions.
- Evacuates equipment to the USAPL or to the equipment manufacturer if the item is beyond ACL capability.

Area TMDE Support Teams

2-24. ATSTs are mobile TMDE support elements that may operate in an "uploaded" configuration, where equipment and standards operate inside expandable vans. An ATST can also function in a "downloaded" configuration if required, when appropriate fixed facilities are available. The ATST—

- May be configured as either an AN/GSM-286 or an AN/GSM-287 support team.
- May be augmented when the workload exceeds the team's personnel capabilities. Augmentation teams provide personnel only.
- Ensures secondary transfer standards are accurately maintained and traceable to NIST.

- Performs secondary transfer level (T-level) C&RS on TMDE-GP and limited TMDE-SP.
- Generates and analyzes TMDE management reports.
- Uses TIMMS to perform automated functions concerning management and administrative tasks.
- Requests repair parts and maintenance supplies required for C&RS operations.

2-25. AN/GSM-287 support teams provide enhanced and additional functional capabilities not found in AN/GSM-286 support teams. Primarily, the AN/GSM-287 set has a greater accuracy in low-frequency standards, added capability in microwave and infrared measurements, and additional physical and electronics standards. The supported unit is responsible for TMDE delivery and pickup to and from the TMDE support element.

THEATER ARMY AREA COMMAND ORGANIZATIONS

2-26. TAACOMs are responsible for supply and maintenance support in their assigned areas in the COMMZ. TAACOMs are multifunctional organizations, and they are not fixed in structure. Their structure is tailored to meet the demands of the mission to include both functional and multifunctional organizations. Figure 2-6 shows the organization of a TAACOM.

2-27. Functional units include—

- Aviation maintenance battalion (aviation intermediate maintenance [AVIM]).
- Petroleum battalion.
- Ammunition group(conventional).
- Personnel battalion.
- EOD battalion.

The ASG is a multifunctional TAACOM unit.

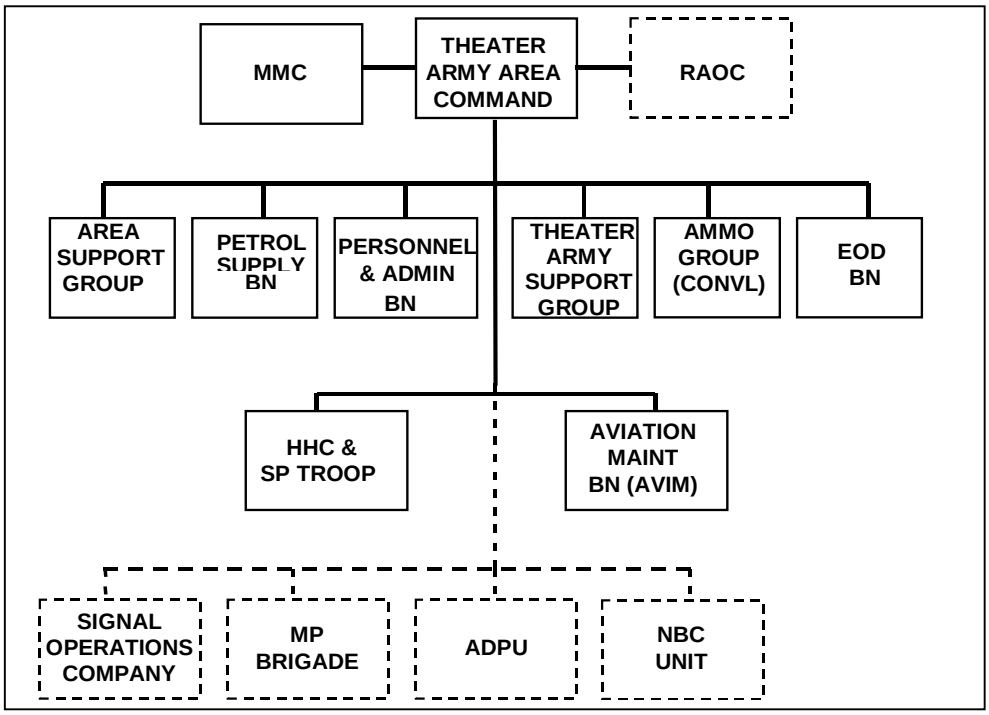

- - - - - PROPOSED OR POSSIBLE AUGMENTATION BASED ON REQUIREMENTS

Figure 2-6. TAACOM Organization

FORCE XXI

FORCE XXI AND BEYOND…

The Army is the process of redesigning the TAACOM in order to provide better unity of command for CSS operations at the operational level. The Theater Support Command (TSC) is the name given to this new organization. The TSC is the senior Army support organization in a theater. The TSC is a multifunctional organization that centralizes the command, control, and supervision of support functions at EAC as directed by the ASCC/ARFOR commander.

The TSC headquarters and its subordinate organizations are modular in design, capable of deploying in whole or in selected parts, depending on METT-TC. Modular designs permit the supported JFC to tailor the EAC support structure.

The mission of the TSC is to maximize throughput and follow-on sustainment, including all CSS functions, of Army forces and other designated supported elements. The TSC is capable of synchronizing logistics and other support operations for the ASCC. It provides area support to the EAC units in the COMMZ and sustainment support to tactical forces. This support may include supply, procurement, property disposal, maintenance, transportation, field services, health services, civil-military affairs, engineer support, finance support, and personnel and administrative services.

FM 63-4 describes, in detail, the missions, function, and employment of the TSC.

LOGISTICS SUPPORT ELEMENT

2-28. The logistics support element is a flexible, deployable, multifunctional organization assigned to US Army Materiel Command (USAMC). The LSE deploys at the request of supported operational commanders to perform traditional USAMC missions forward on the battlefield or area of operations. It has a small peacetime cadre with the bulk of the positions being battle-rostered. Its elements will retain technical lines of communications with their major commands.

STRUCTURE

2-29. The LSE will be rapidly deployable, its structure evolving during the course of the operation to adapt to changing requirements and the capabilities of deployed organizations. Like other supporting organizations, it supports the CINC with personnel and equipment that deploy to the area of operations. The LSE may also be useful during SASO in controlling the transition of support functions to host nation authorities, the UN,

contractors, or other agencies. This allows other Army forces to redeploy to prepare for the next contingency. More details on the LSE are in FM 100-16.

MISSION

2-30. The LSE's primary mission is to enhance readiness through unified, integrated application of USAMC's logistics force projection of CONUS-based technical capabilities to deployed units in any theater of operations. The LSE shortens the logistics pipeline by providing the similar support in theater that USAMC provides in CONUS.

FUNCTIONS

2-31. The LSE also performs the following functions:

- Receipt, storage, issue, and retrograde/redistribution of high-dollar, high-tech, low-density items and selected maintenance items.
- Limited GS- and depot-level maintenance to return items to support customers or to support the reparable exchange (RX) program.
- Flexible, modular GS-/weapon-system-oriented teams from CONUS depots and organic or contractor forward-repair activities. The senior Army logistician will identify maintenance requirements to the LSE, which will workload attached and operationally controlled (OPCON) maintenance units and activities.
- Designated maintenance services to support the theater aviation maintenance program.
- Technical, logistics, training, and other specialized services for theater ammunition functions.
- Logistics software management, including troubleshooting and software replacement, until a support group takes over the mission.
- Oversight of contractor-operated activities in the theater through the contracting officer's representatives, and administrative services to the representatives.
- TMDE support.
- Linkage between the theater and the technology base and other research, development, test, and evaluation resources.
- Assistance through interim materiel modifications, operational suggestions, and BDAR of weapon systems.
- Logistics Assistance Program support to provide on-site technical assistance to users of AMC-fielded equipment in theater.
- Army Oil Analysis Program support.

LOGISTICS CIVIL AUGMENTATION PROGRAM

2-32. This DA program employs civilian contractors in noncombatant roles to augment military resources. LOGCAP leverages civilian corporate resources as facility and logistics service support to US forces. USAMC is the proponent for LOGCAP management. LOGCAP requirements are formally identified by the CINC/ASCC. LOGCAP provides augmentation capabilities to support maintenance requirements not covered by other means, such as Active and Reserve Components, multinational forces, and host nation support. The LSE commander functions as the central focal point to

LOGCAP planning and execution in-theater. The commander also provides the CINC/ASCC with the current status of LOGCAP initiatives and action.

2-33. LOGCAP teams are responsible for—

- Deploying worldwide in support of any contingency using LOGCAP capabilities.
- Advising requiring activity on LOGCAP capabilities.
- Assisting customers in articulating requirements to contractor and ensuring contractual compliance.
- Integrating LOGCAP augmentation capabilities into deployed force structure to meet METT-TC requirements.
- Facilitating the teaming of the customer and contractor to accomplish the mission.

AREA SUPPORT GROUP ORGANIZATION

2-34. The TAACOM is divided into several smaller areas. An area support group is assigned to the COMMZ to provide maintenance and supply support to units operating within or passing a specified area. ASGs, like the TAACOM, are multifunctional organizations. They are not fixed in structure; each ASG consists of those units necessary to perform the support mission assigned to it.

MISSION

2-35. The ASG provides DS-level support to units located in or passing through the ASG's area of operations, as well as GS-level support for those units assigned to it by the theater.

STRUCTURE

2-36. Figure 2-7 shows the organization of a typical area support group in a TAACOM. Functional CSS battalions include—

- Supply and service battalions.
- Maintenance battalions.
- Petroleum supply battalions.

NOTE

There are no transportation support units in an ASG. All transportation units in the COMMZ belong to the TRANSCOM.

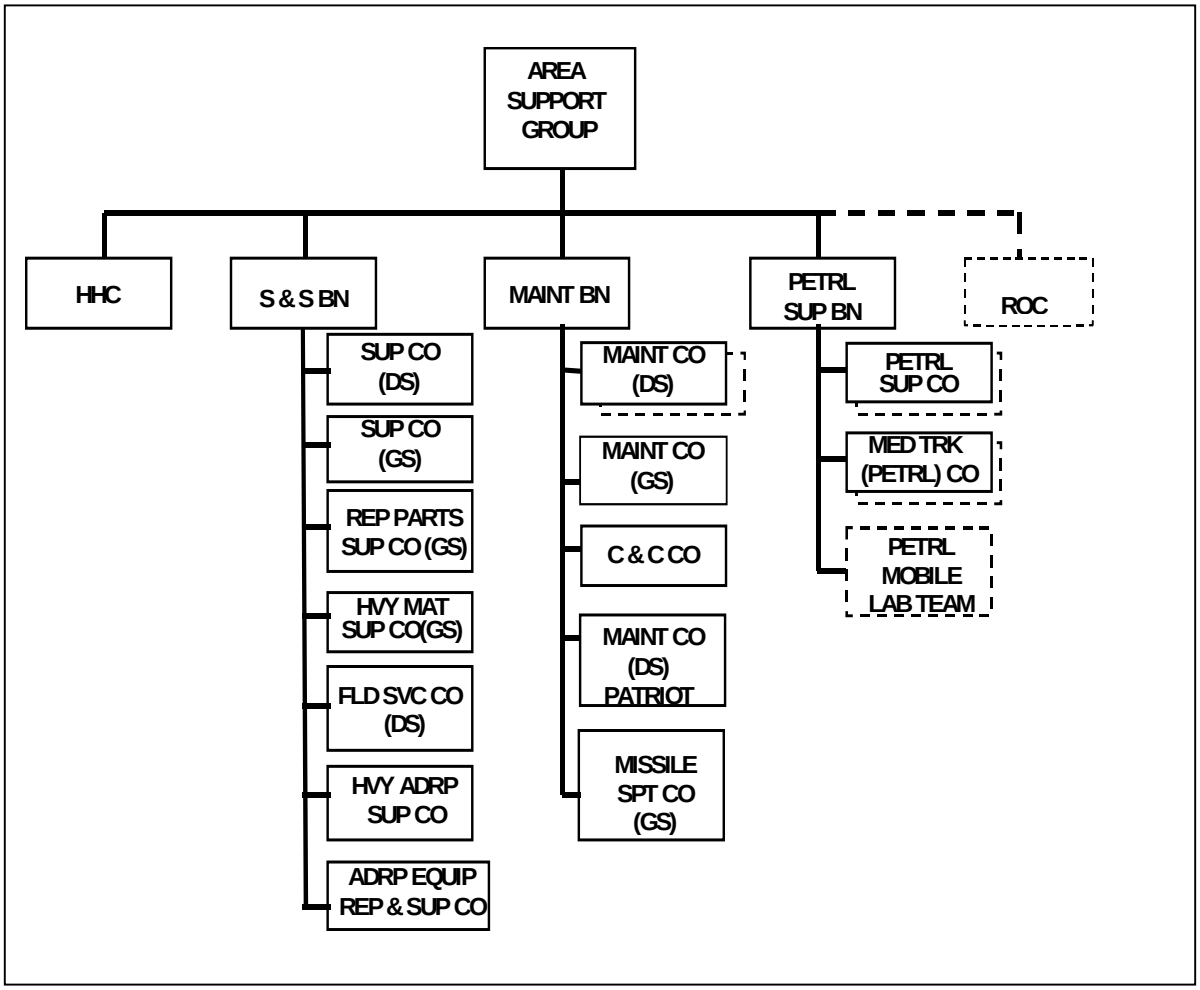

Figure 2-7. Area Support Group

MAINTENANCE BATTALION (AREA SUPPORT GROUP)

MISSION

2-37. The primary mission of the maintenance battalion is to provide DS/GS-level maintenance support, repair parts support, technical assistance, and recovery support to nondivisional units in its area of operation and to provide backup DS-level maintenance support as required.

CAPABILITIES

2-38. The DS/GS maintenance battalion is a functional CSS organization. It provides maintenance and repair parts support for a great variety of equipment, except for aircraft, marine, rail, airdrop, missile-aircraft armament, office machines, avionics, and photographic equipment. Figure 2-8 shows the typical organization of a DS/GS maintenance battalion (ASG).

NOTE

The battalion has a variable number of maintenance units attached to a headquarters and headquarters company IAW the mission to be performed. A typical DS/GS maintenance battalion includes a headquarters and headquarters company and three to five nondivisional DS/GS maintenance companies. At times, the battalion may be augmented with nonmaintenance units if doing so improves the quality of support.

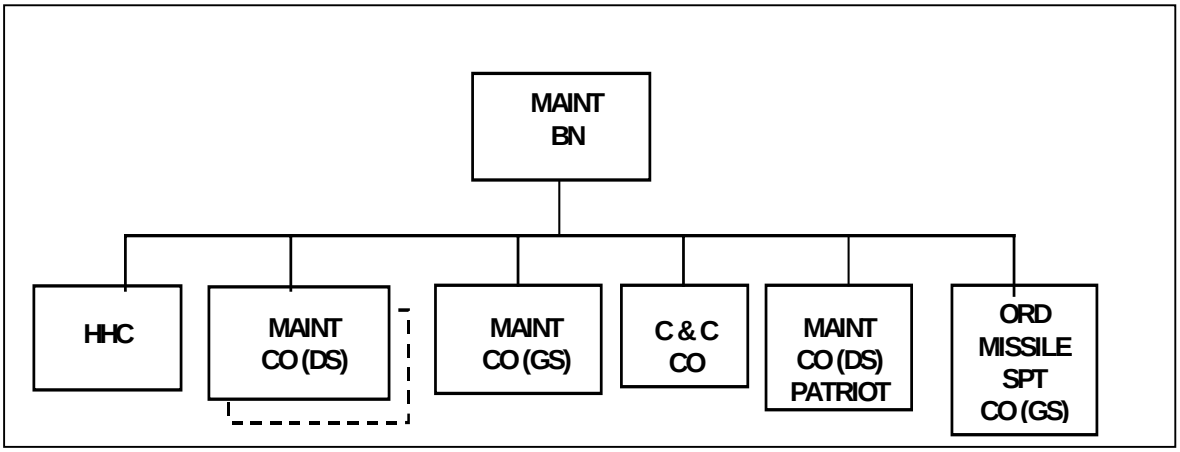

Figure 2-8. Maintenance Battalion, ASG

MAINTENANCE COMPANY, DS, MAINTENANCE BATTALION (AREA SUPPORT GROUP)

MISSION

2-39. This unit provides DS-level maintenance and repair parts supply support and technical assistance commensurate with stated capabilities for nondivisional units assigned to, or passing through, the corps and theater areas.

CAPABILITIES

2-40. This unit provides DS maintenance for—

- Automotive equipment.
- Communications-electronics equipment.
- Base computer equipment.
- Construction equipment.
- Fabric.
- Fuel and electric components.
- Metalworking.
- Machining.
- Power generation equipment.
- Quartermaster and chemical equipment.
- Refrigeration.
- Small arms.
- Special electronic devices.
- Telephone central office equipment.
- Teletypewriters.

NOTE

Ability to perform certain missions is dependent on augmentation of the base company by special teams.

ADDITIONAL CAPABILITIES

2-41. This company also provides—

- Class IX from an authorized stockage list (ASL) of up to 5000 lines, which includes 500 lines of RX items.
- Backup recovery capability for supported units.
- Technical assistance and on-site maintenance support.

The unit performs the following DS maintenance tasks:

- Inspection, diagnosis, and troubleshooting.
- Rapid repair and return of equipment to customers by adjusting and replacing line replacement units (LRUs), assemblies, and components.
- Repair of selected high-usage components in support of RX operations.

NOTE

Soldiers from this unit will be spread throughout the corps and COMMZ in performance of their mission.

This unit is dependent on—

- Elements of the corps/theater for legal, combat health support, finance, personnel, and administrative services.
- HHC for religious support.
- Appropriate elements of the corps and theater for transportation and supplemental stockage of selected major assemblies, RX, major end items, repair parts, and evacuation of unserviceable items and vehicles.
- The corps or theater signal brigade area communications company for entry into the area communications system.

BASIS OF ALLOCATION

2-42. One or more per TAACOM. The unit is normally attached to a maintenance battalion, TOE 43436L. Figure 2-9 shows a typical DS maintenance company, maintenance battalion (ASG).

MOBILITY

2-43. This company is 80 percent mobile in one lift. The C-E equipment section will be 100 percent mobile and MSTs will consist of two personnel to provide assistance with required maintenance tasks and security and safety in transit.

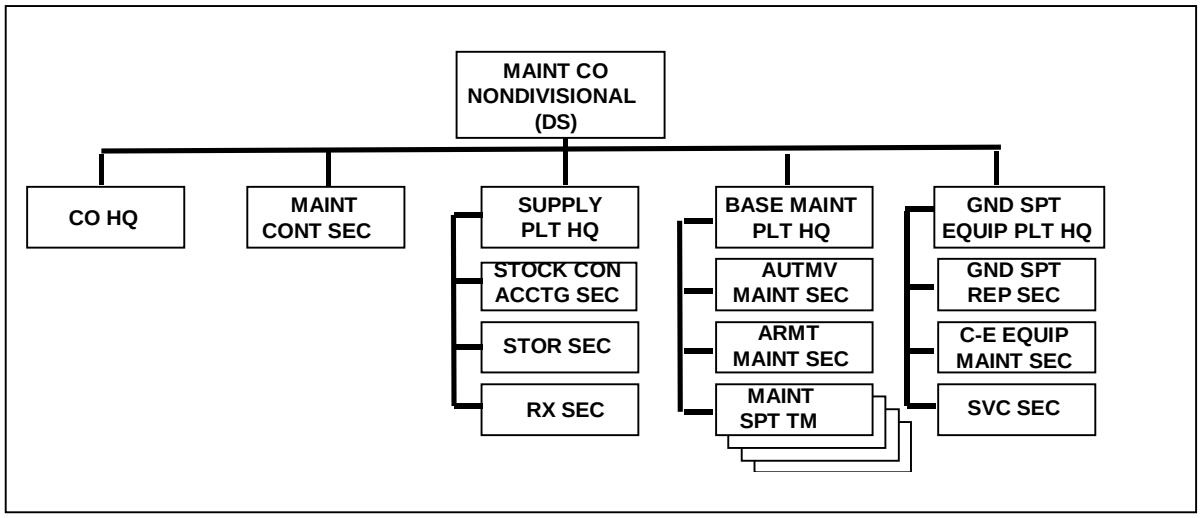

Figure 2-9. Typical DS Maintenance Company, Maintenance Battalion

MAINTENANCE COMPANY, GS, MAINTENANCE BATTALION (AREA SUPPORT GROUP)

MISSION

2-44. To provide general support maintenance for conventional heavy and light equipment end items and components for return to the theater supply system.

CAPABILITIES

2-45. This company repairs and returns the following to the supply system:

- Automotive equipment.
- Construction equipment.
- Small arms.
- Tank turrets.
- Communications-electronics equipment.
- Special electronic devices.
- Utilities equipment.
- Power generation equipment.
- Quartermaster and chemical equipment.
-

In addition, the unit performs—

- Canvas repair.
- Metalworking.
- Machining.
- Refrigeration equipment repair.

ADDITIONAL CAPABILITIES

2-46. This company also provides—

- Command and control for not more than five modular repair platoons.
- All operational, administrative, and logistical support (including food service, personnel, and property accountability for assigned platoons).
- Internal Class IX supply only.
- Area maintenance support, including technical assistance, on-site maintenance, and backup support as required.
- Unit-level maintenance on theater reserve stocks (TRS) when augmented by unit maintenance teams, as required.
- GS maintenance support when augmented by modular platoons for the repair of—
  - Fire control instruments.
  - Fire control systems.
  - Artillery equipment.
  - Automated data processing (ADP).
  - Printed circuit boards (PCBs).
  - TMDE.
  - Radar.

- Controlled cryptographic items.
- Office machines.
- Audiovisual equipment.
- Electronic warfare/intercept equipment.

- Unit maintenance of all organic equipment except tracked vehicles and communications security (COMSEC) equipment for assigned general support maintenance platoons.

NOTE

This unit does not perform repairs on aircraft, missiles, ammunition-peculiar items, or medical, cryptographic, marine, and rail equipment.

BASIS OF ALLOCATION

2-47. One or more per TAACOM. The unit is normally assigned to a headquarters and headquarters detachment, maintenance battalion, TOE 43436L. Figure 2-10 is a diagram of a typical GS maintenance company, maintenance battalion, ASG.

MOBILITY

2-48. This unit—

- Is capable of transporting 158,300 pounds (10,433 cubic feet) of TOE equipment with organic vehicles.
- Has 66,076 pounds (5,366 cubic feet) of TOE equipment requiring additional or auxiliary transportation.
- Requires 25 percent of its TOE equipment and supplies to be transported in a single lift using its authorized organic vehicles.

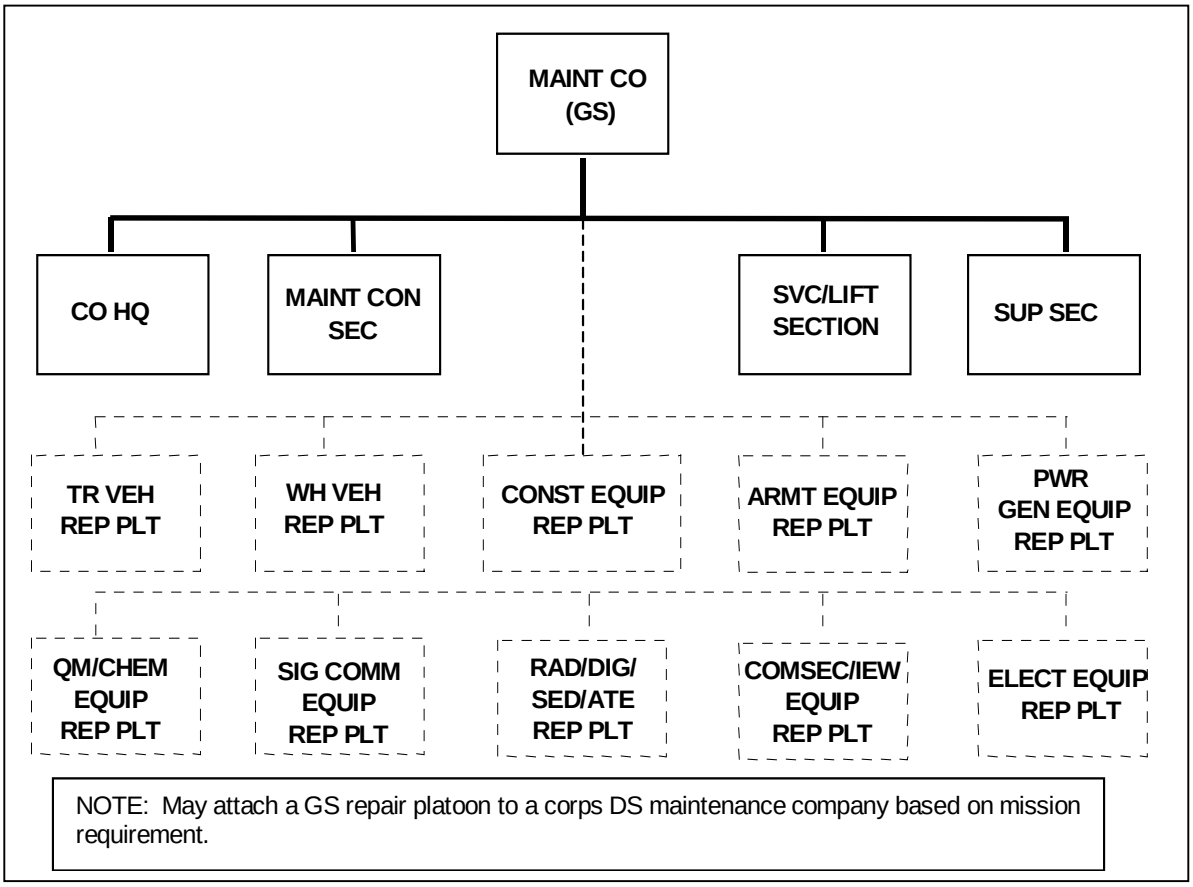

Figure 2-10. GS Maintenance Company, Maintenance Battalion, ASG

COLLECTION AND CLASSIFICATION COMPANY, MAINTENANCE BATTALION (AREA SUPPORT GROUP)

MISSION

2-49. To establish and operate a collection and classification facility for the receipt, inspection, segregation, disassembly, preservation, and disposition of serviceable and unserviceable Class VII and IX materiel and similar foreign materiel (except items peculiar to cryptographic materiel, missile systems, aircraft, airdrop equipment, drones, and medical materiel).

CAPABILITIES

2-50. This company inspects, segregates, disassembles, and maintains the following:

- Radios.
- Microwave systems.
- Target acquisition/surveillance equipment.

- Special electronic devices.
- Metalworking.
- Small arms/artillery.
- Fire control systems.
- Armament.
- Utilities equipment.
- Power generation equipment.
- Construction equipment.
- Fuel and electric components.
- Tracked vehicles.
- Quartermaster and chemical equipment.
- Wheeled vehicles.
- Survey instruments.

ADDITIONAL CAPABILITIES

2-51. This company also performs—

- Disassembly of end items.
- Identification and inspection of components and assemblies for repair, return to supply stocks, or disposal to a defense logistics agency property disposal office (except items peculiar to cryptographic material, missile systems, aircraft, airdrop equipment, drones, and medical material).

NOTE

The Identification and Inspection Section, Collection and Classification Company, which performs these functions, is unique in its grade structure. The section requires one warrant officer, one section chief NCO, and nine technical inspectors in the following areas: microwave, special electronic devices, surveillance radar, COMMEL/COMSEC, armament, power generation, tracked vehicles, wheeled vehicles, and engineer equipment.

- Segregation, preservation, and packaging of selected items of materiel and related components for return to supply channels for evacuation and technical intelligence evaluation.
- Operation of a cannibalization point for items processed by the unit, when authorized by higher headquarters.

BASIS OF ALLOCATION

2-52. One or more per ASG. It is normally attached to a headquarters and headquarters detachment, maintenance battalion, TOE 43436L Figure 2-11 is a diagram of a collection and classification company, maintenance battalion (ASG).

MOBILITY

2-53. This unit—

- Is capable of transporting 440,400 pounds (11,379 cubic feet) of TOE equipment with organic vehicles.
- Has 53,056 pounds (5,266 cubic feet) of TOE equipment requiring additional transportation.
- Requires 25 percent of its TOE equipment and supplies to be transported in a single lift using its authorized organic vehicles.

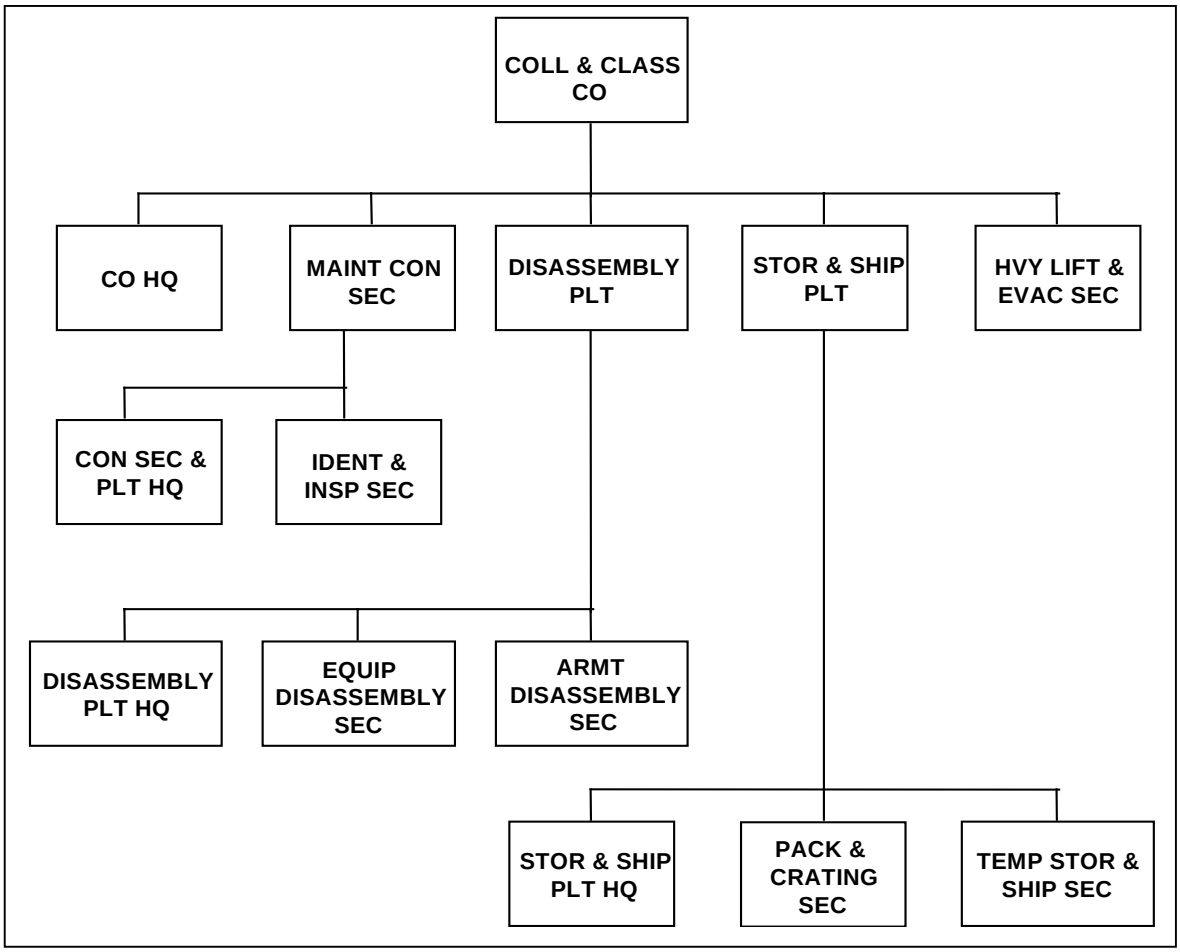

Figure 2-11. Collection and Classification Company, Maintenance Battalion (ASG)

FORCE XXI AND BEYOND…

Collection and Classification Company will continue to play a vital role on the Force XXI battlefield. In addition to the C&C company, there will be two new platoons formed. One of the platoons will perform vital maintenance inspection functions at distribution hubs along the distribution pipeline. The second platoon will move throughout the battlefield, locating abandoned equipment, assessing the condition of various components on the system, removing serviceable components as directed, and returning critical components to the distribution system. These platoons can be attached to a support maintenance or component repair company operating in the theater or corps area. Most, if not all, the collection and classification mission will be performed by the Reserve Component.

ORDNANCE MISSILE SUPPORT COMPANY (GS), MAINTENANCE BATTALION (ASG)

2-54. The mission of the ordnance missile support company (GS) is to provide—

- GS-level maintenance at EAC for air defense artillery (ADA) and land combat missile systems (LCMS).
- Repair parts supply support to missile support units assigned to EAC or units passing through the theater army area. With appropriate augmentation teams, the unit can support up to two corps.
- DS base shop and on-site maintenance support teams provide maintenance support for units assigned to EAC. The unit also provides maintenance support for Army war reserve (AWR) stocks.
- Class IX supply support to unit maintenance activities, including receipt, storage, and issue of missile repair parts. The ASL supports the unit's maintenance mission.
- The general supply support base for combat-essential Class IX repair parts and selected maintenance-related items from other classes of supply to support the ASLs of supported units. It receives all missile parts and supply requisitions from supported units and processes requests on a fill-or-pass basis.

CAPABILITIES

2-55. This maintenance company provides—

- GS-level support for ADA and LCMS weapon systems in theater.
- Maintenance for ADA and LCMS associated training equipment.
- DS-level maintenance support for systems on an area basis as required at theater level.

BASIS OF ALLOCATION

2-56. One per TAACOM, normally assigned to a maintenance battalion headquarters and headquarters detachment, TOE 43436L, of the area support group.

MOBILITY

2-57. The unit's mobility is 80 percent, based on the requirement to change locations and maintain the maintenance support mission. All MSTs will be 100 percent mobile and will consist of two personnel to provide assistance with required maintenance tasks and security and safety in transit.

AUGMENTATION TEAM

2-58. The unit may be augmented by DS and GS augmentation teams, based on mission requirements. The teams are assigned as required, based on the density of supported ADA battalions or units operating LCMS. For a list of augmentation teams available to supplement the EAC or corps missile support company, see Figure 2-12.

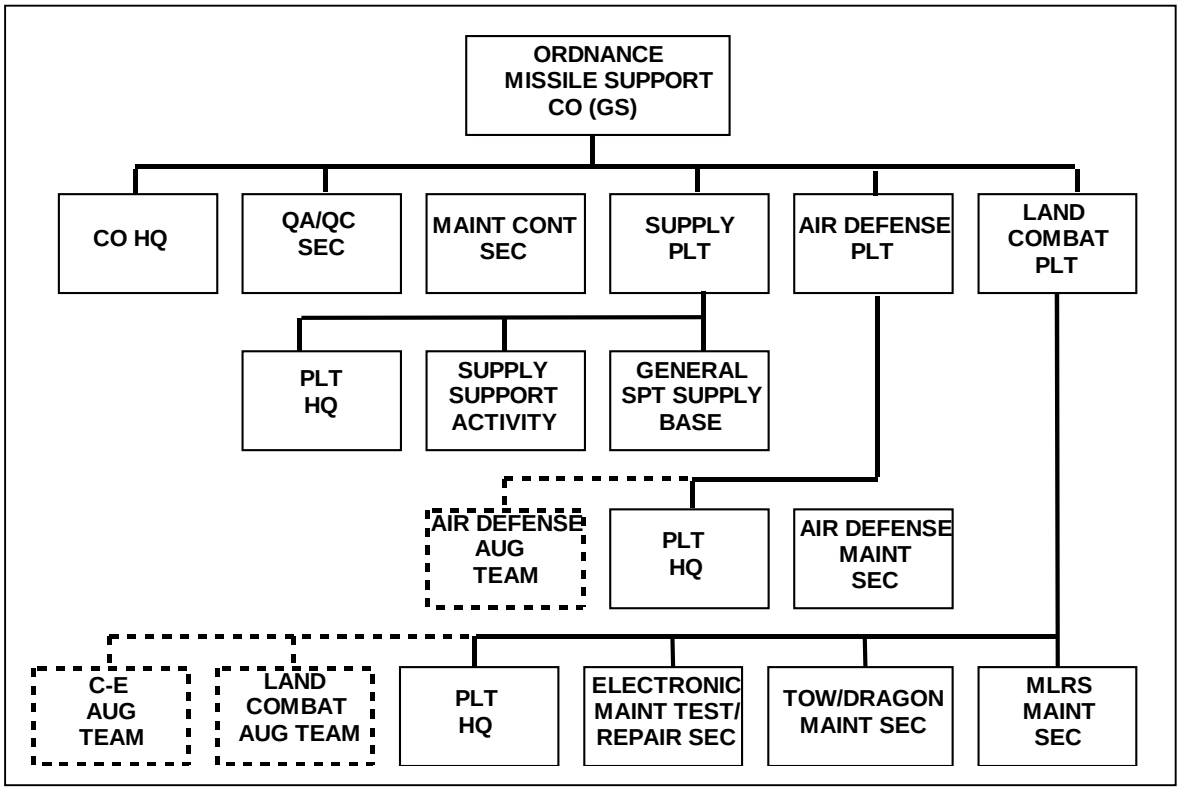

Figure 2-12. Ordnance Missile Support Company (GS)

MAINTENANCE COMPANY (DS), PATRIOT, MAINTENANCE BATTALION (ASG)

MISSION

2-59. The maintenance company (DS), Patriot, TOE 43607L, is assigned to a maintenance battalion and attached to a Patriot ADA battalion to provide DS conventional maintenance and Class IX repair parts. The unit, along with the assigned Patriot missile system, DS/GS augmentation team, makes up the support package for one Patriot ADA battalion.

CAPABILITIES

2-60. This maintenance company provides support to the dedicated Patriot missile system, DS/GS.

BASIS OF ALLOCATION

2-61. One per Patriot battalion. It is normally attached to a maintenance battalion, TOE 43436L. The unit normally collocates with the supported Patriot ADA battalion. Figure 2-13 shows the organization of a maintenance company (DS), Patriot, maintenance battalion (ASG).

MOBILITY

2-62. The unit's mobility is 100 percent, based on the requirement to change locations and maintain the maintenance mission. MSTs will consist of two personnel to provide assistance with required maintenance tasks and security/safety in transit.

AUGMENTATION TEAMS

2-63. The company is allocated one DS/GS Patriot missile support team to provide Patriot system maintenance capability: TOE 9529LX, Patriot missile system, (DS/GS) augmentation team provides DS/GS maintenance for Patriot missile equipment organic to a Patriot battalion. Support includes limited base shop and three MSTs for Patriot-peculiar equipment, limited GS Class IX, identification friend or foe (IFF) equipment, and Stinger air bottle and battery recharging. This team attaches to the Patriot conventional maintenance company for ASL support, base shop, and common maintenance equipment utilization.

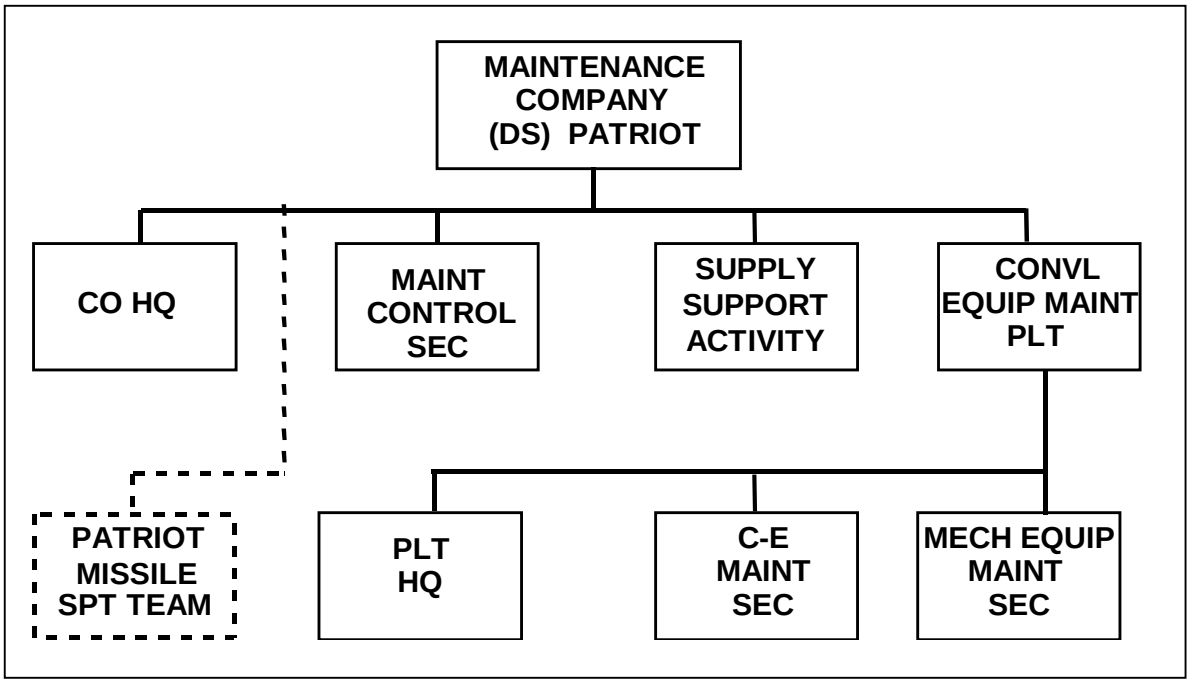

Figure 2-13. Maintenance Company (DS), Patriot

SECTION II – CORPS SUPPORT AREA

2-64. Section II describes the types of maintenance organizations in the corps support area. The corps area within the combat zone is designated by higher headquarters. The corps organizational structure is not fixed. Its size and composition depend on the situation and mission. The corps usually consists of two to five divisions and the CS and CSS units needed to support the maneuver force. The major CSS elements of the corps are—

- Corps support command (COSCOM).
- Personnel group.
- Finance group.

CORPS SUPPORT COMMAND ORGANIZATION

2-65. The COSCOM is the primary logistics organization in the corps. It provides supply, field services, transportation, maintenance, and medical support to the divisions and the nondivisional units of the corps. The COSCOM is a multifunctional organization; its organizational structure is not fixed.

2-66. A typical COSCOM will have multiple corps support groups and a medical brigade. If there are three or more transportation battalions, they may form a transportation group within the COSCOM. Figure 2-14 shows the typical organization of a COSCOM.

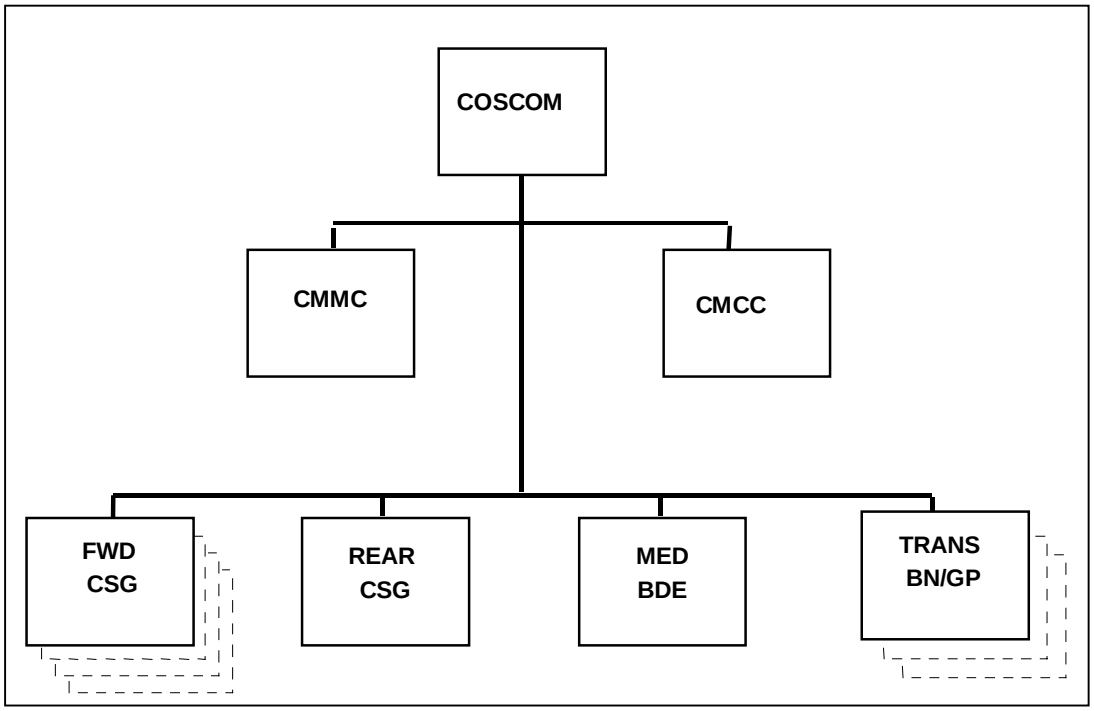

Figure 2-14. Typical COSCOM Organization

CORPS SUPPORT GROUP ORGANIZATIONS

2-67. CSGs provide command, control, staff planning, and supervision for three to seven subordinate battalions. Like the COSCOM, the CSG is multifunctional, not fixed in structure. The basic mission and composition of the CSG varies depending on whether the CSG is employed in the forward or rear area of the corps.

CORPS SUPPORT GROUP (REAR)

Mission

2-68. Rear CSGs operate in the rear area of the combat zone and provide area support to units employed in or passing through their area of operations. They also provide reinforcing support to forward CSGs. Rear CSGs normally have three to seven subordinate battalions, which may be functional or multifunctional. Their organizational structures are not fixed; they are determined by COSCOM mission requirements. They provide both DS and GS support to units in the corps area.

Units

2-69. Functional units include—

- Supply and service battalion (GS).
- Ammunition battalion (GS).
- Petroleum supply battalion (GS).
- Aircraft maintenance battalion (AVIM).
- Water supply battalion.
- Transportation battalion.

Corps support battalions (CSB) (DS only) are multifunctional units. Figure 2-15 shows the typical organization of a corps support group (rear).

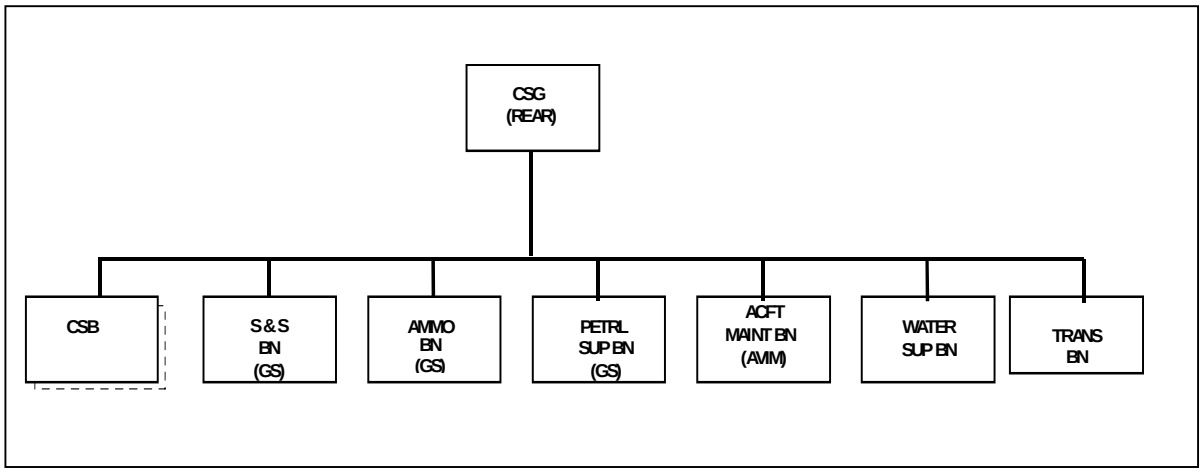

Figure 2-15. Typical Organization, Corps Support Group (Rear)

CORPS SUPPORT GROUP (FORWARD)

Mission

2-70. Forward CSGs operate in or near the division area and provide direct support to all corps units in their area of responsibility. They focus their support on combat maneuver forces such as the division, separate brigade, armored cavalry regiment (ACR), corps artillery, and corps combat engineers. They also provide direct support to nondivisional forces, area support to units passing through, and backup/reinforcing support to divisional forces.

Employment

2-71. Normally, a COSCOM employs one forward CSG with each division in the corps structure. The forward CSG's structure is not fixed, but it usually consists of two or more multifunctional CSBs. The CSG provides support as far forward as possible and ensures responsive logistical support to corps units operating in or forward of the division sector. The CSGs normally employ one CSB in the division rear and one or more CSBs behind the division rear boundary.

CORPS SUPPORT BATTALION

MISSION

2-72. The CSB in the rear CSG provides only DS-level maintenance, supply, field services, and transportation support for all units employed in, or passing through, its area of responsibility in the corps rear area. The functional battalions in the rear CSG provide primarily GS-type support to units throughout the corps area. Rear CSBs of the forward CSG operating behind the division rear boundary are also not fixed; they are task-organized to provide DS and GS support to units in their area of responsibility. The rear CSB of the forward CSG provides area support to units passing through its assigned support sector, backup support (DS and GS) to the forward CSB of the forward CSG, and reinforcing support (DS and GS) to division CSS units. Figure 2-16 shows the organization of two possible CSBs found in a forward CSG (employed behind the division rear boundary)and one CSB found in the division area.

NOTE

Elements from GS- and depot-level maintenance activities can be found as far forward as required to support the tactical situation.

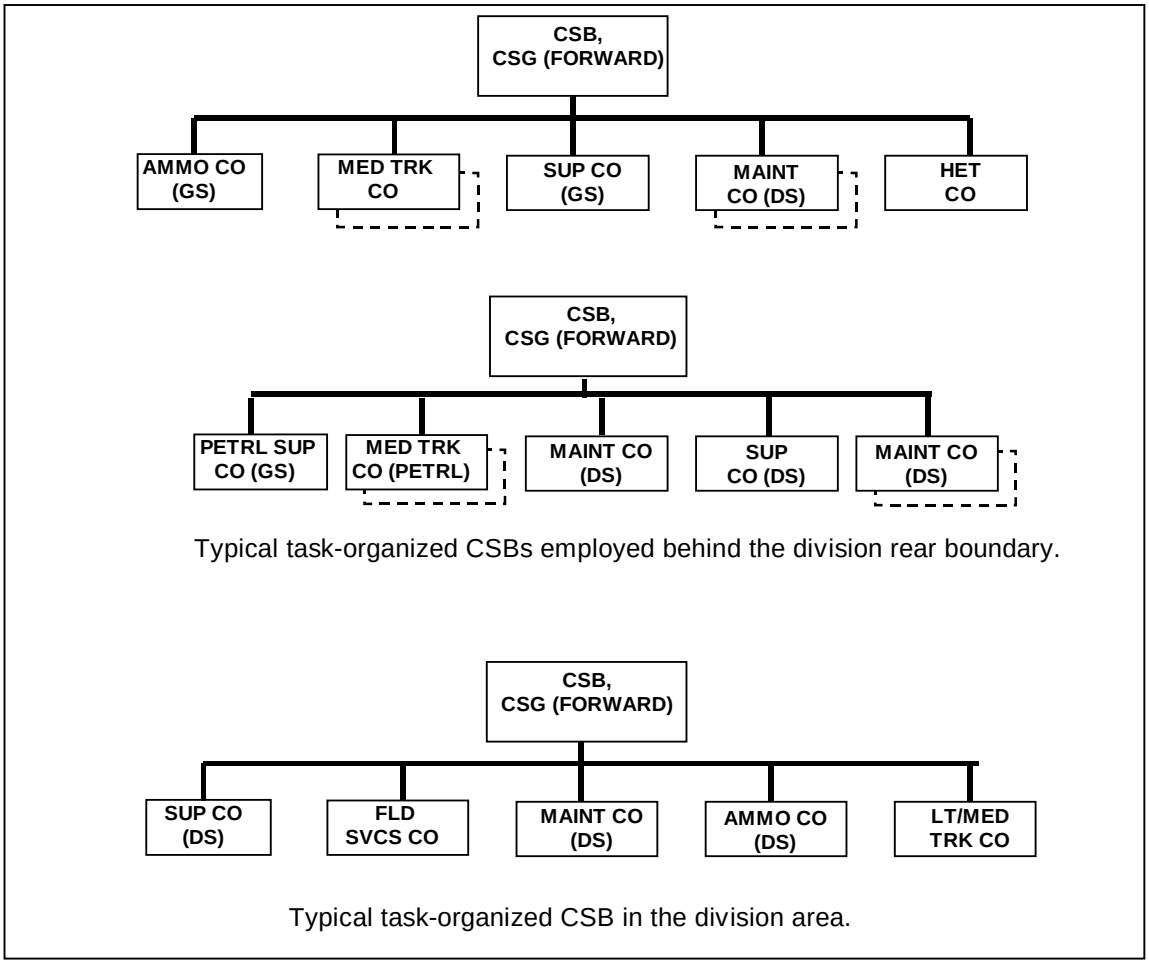

Figure 2-16. CSBs in a Forward CSG

NONDIVISIONAL MAINTENANCE COMPANY (DS), CORPS SUPPORT BATTALION (CSG)

MISSION

2-73. This unit provides DS maintenance and repair parts supply support and technical assistance commensurate with stated requirements for nondivisional units assigned to, or passing through, the corps area. It also provides backup support for divisional units, separate brigades, and for ACR.

CAPABILITIES

2-74. This unit provides DS maintenance for—

- Automotive equipment.
- Communications-electronics equipment.

- Base computer equipment.
- Construction equipment.
- Fabric.
- Fuel and electric systems.
- Metalworking.
- Machining.
- Power generation equipment.
- Quartermaster and chemical equipment.
- Refrigeration.
- Small arms.
- Special electronic devices.
- Telephone central office equipment.
- Teletypewriters.

ADDITIONAL CAPABILITIES

2-75. This company also provides—

- Class IX from an ASL of up to 5000 lines, which includes 500 lines of RX items.
- Backup recovery capability for supported units.

2-76. This unit performs the following DS maintenance tasks:

- Inspection, diagnosis, and troubleshooting.
- Rapid repair and return of equipment to customers by adjusting and replacing LRUs, assemblies, and components.
- Repair of selected high-usage components in support of RX operations.

NOTE

Soldiers from this unit will be forward of the division's rear boundary and spread throughout the corps in performance of their mission.

2-77. This unit is dependent on—

- Elements of the corps/theater for legal, combat health support, finance, personnel, and administrative services.
- HHC for religious support.
- Appropriate elements of the corps and theater for transportation and supplemental stockage of selected major assemblies, RX, major end items, repair parts, and evacuation of unserviceable items/vehicles.
- The corps or theater signal brigade area communication company for entry into the area communication system.

BASIS OF ALLOCATION

2-78. Allocation is based on workload for systems supported in the area. However, the company will usually be in the CSB assigned to a forward CSG

providing backup support to divisions and forward support to nondivisional units operating in the division area. Figure 2-17 shows the typical organization of a DS maintenance company, corps support battalion (CSG).

MOBILITY

2-79. This company is 80 percent mobile in one lift.

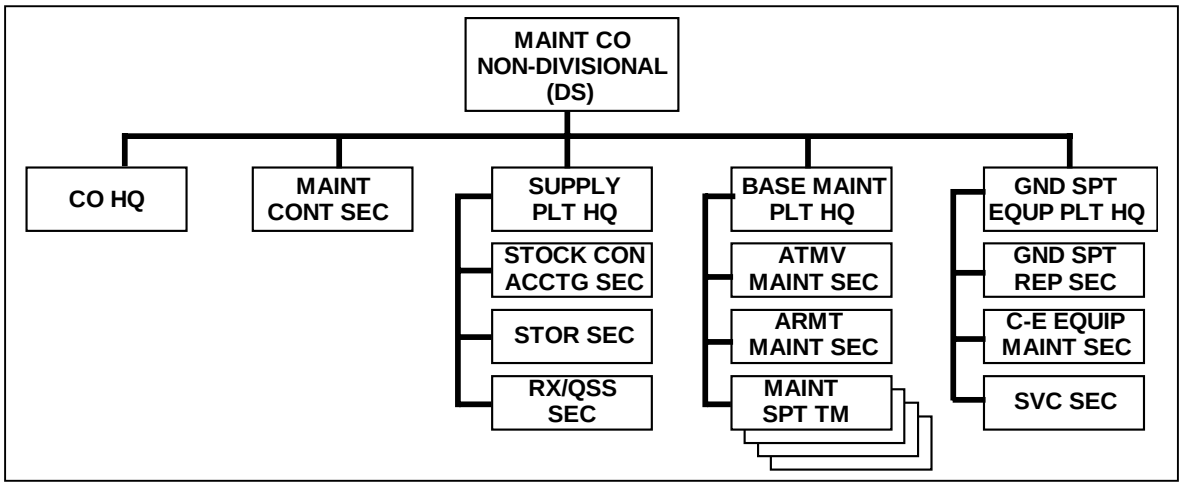

Figure 2-17. Typical Organization, DS Maintenance Company, Corps Support Battalion (CSG)

ORDNANCE MISSILE SUPPORT COMPANY (DS), CORPS SUPPORT BATTALION (CSG)

MISSION

2-80. To provide a command and control structure for missile systems maintenance support, for units assigned to or passing through the corps area. This company along with augmentation teams can provide support in the following ways:

- Base shop support for light divisions, armored cavalry regiments, and separate brigades. With augmentation teams, the unit can support any corps configuration.
- Class IX supply support to the unit's maintenance elements, including receipt, storage, and issue of missile system repair parts to tactical units.

CAPABILITIES

2-81. This unit provides DS support to the following units:

- ADA battalions.
- Units operating LCMS.

BASIS OF ALLOCATION

2-82. One per COSCOM. Normally, the unit would be assigned to a corps support battalion, headquarters and headquarters detachment, TOE 63426L. Figure 2-18 shows the organization of an ordnance missile support company (DS), corps support battalion, (CSG).

MOBILITY

2-83. The unit's mobility is 80 percent, based on the requirement to change locations and maintain the maintenance mission. All MSTs must be 100 percent mobile and will consist of two personnel to provide assistance with required maintenance tasks and security/safety in transit.

AUGMENTATION TEAMS

2-84. The unit may be augmented by DS and GS augmentation teams, on mission requirements. Teams are assigned as required to provide maintenance support to a unit assigned to a corps. Teams are allocated based on the density of supported ADA battalions or units operating land combat missile systems.

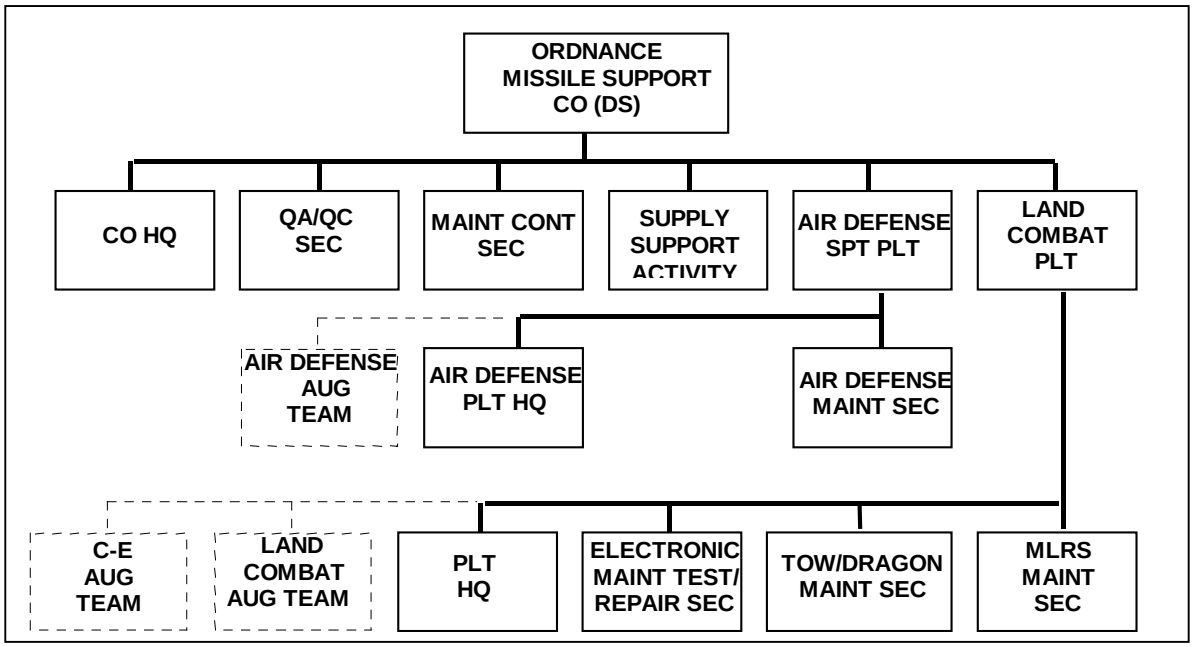

Figure 2-18. Typical Organization, Ordnance Missile Support Company, DS, CSB (CSG)

MAINTENANCE COMPANY (DS) PATRIOT, CORPS SUPPORT BATTALION (CSG)

MISSION

2-85. The maintenance company (DS) Patriot, TOE 43607L, provides DS conventional maintenance and Class IX repair parts supply to one corps Patriot ADA battalion. The unit, along with the assigned Patriot missile system, (DS/GS) augmentation team, makes up the support package for one Patriot ADA battalion at corps.

CAPABILITIES

2-86. This maintenance company provides conventional and system maintenance support to the Patriot missile system, DS/GS.

BASIS OF ALLOCATION

2-87. One per Patriot battalion. At corps, the unit is normally attached to a corps support battalion, TOE 63426L. The unit collocates with the supported Patriot ADA battalion. Figure 2-19 shows the organization of a maintenance company (DS) Patriot, corps support battalion (CSG).

MOBILITY

2-88. The unit's mobility is 100 percent, based on the requirement to change locations and maintain the maintenance mission.

AUGMENTATION TEAMS

2-89. The company is allocated one Patriot missile system, (DS/GS) augmentation team. The 09529LX Patriot missile system, (DS/GS) augmentation team provides DS/GS maintenance for Patriot missile equipment organic to a Patriot battalion. Support includes limited base shop and three MSTs for Patriot-peculiar equipment, limited GS Class IX, IFF equipment, and Stinger air bottle and battery recharging. This team attaches to the Patriot conventional maintenance company for ASL support, base shop, and common maintenance equipment utilization.

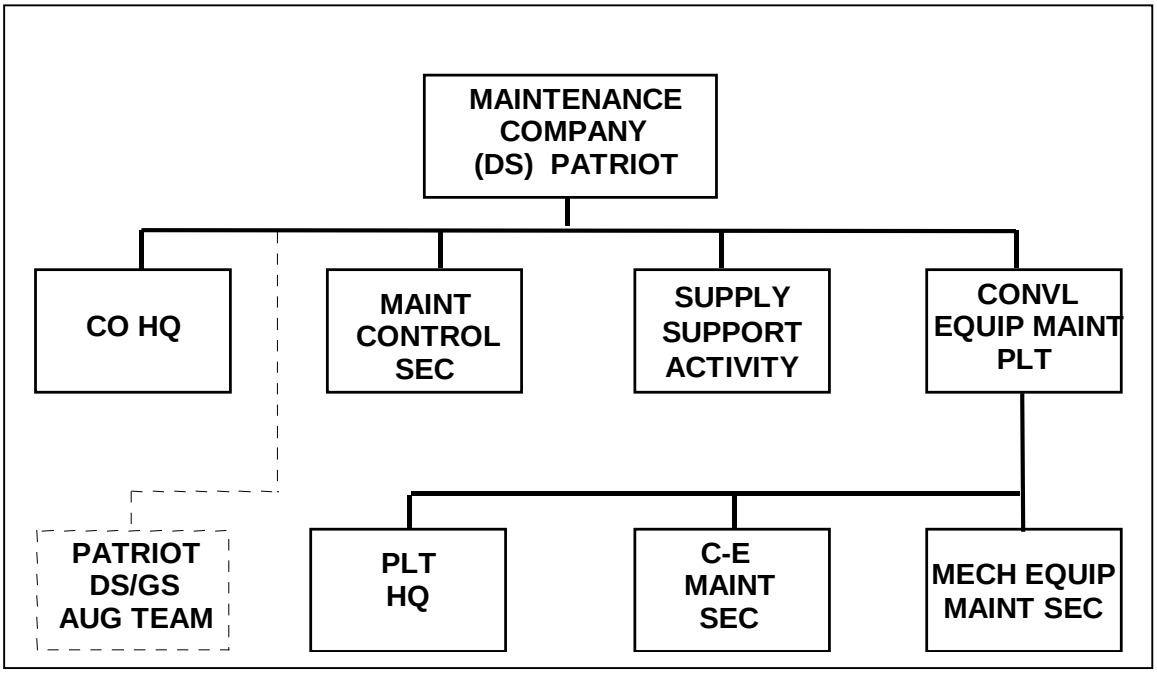

Figure 2-19. Typical Organization, Maintenance Company (DS) Patriot, CSB (CSG)

FORCE XXI AND BEYOND…

The Army is the process of redesigning the echelons-above-division and echelons-above-corps logistical support structure. The Ordnance Corps has proposed significant design changes for the maintenance units that provide EAD/EAC maintenance support. The Support Maintenance Company (SMC) will provide field-level maintenance support to units as directed by the theater or corps. Component Repair Companies (CRCs) will provide sustainment-level maintenance in support of theater operations. CRCs perform DS/GS-level repair of major system components and return those components to the distribution system. The SMC and CRC will replace existing nondivisional direct and general support maintenance units.

Both the SMC and the CRC are modular in nature. Modules or cells can be added to the base headquarters structure, as required, to provide specific maintenance repair capabilities to the unit. These units will be 100 percent mobile in order to keep up with supported units. Also, these units will be fielded with state of the art diagnostics and tools to maintain future Army weapons systems.

The Support Maintenance Company will provide "on-system" maintenance to designated corps units operating within its area of responsibility. Also, these units provide maintenance support on an area basis to units passing through the area and backup support to divisional units as directed. These units will operate in a manner similar to the current nondivisional DS maintenance units. The SMC focuses on replacement of major system components forward, at the point of breakdown or at designated maintenance collection points, and return of operational systems to the supported unit.

The Component Repair Company will perform "off-system" maintenance tasks in support of the distribution system. The CRC performs component repair for both DS and GS components, such as engines, transmissions, LRUs, starters, generators, and fire control devices. The CRC performs a function similar to that of the current GS maintenance company. However, these units will be smaller, modular, more deployable, and tailored to maintain critical weapon system components.

SECTION III – DIVISION SUPPORT AREA AND BRIGADE SUPPORT AREA

2-90. Section III describes the organizations in the division support area (DSA) and brigade support area (BSA). The DSA is the area of the division rear area occupied by the division support command (DISCOM) command post and its organic and attached units. This area may also contain combat support units and COSCOM elements operating in support of the division and forward corps units. The BSA is generally located to the rear of the maneuver battalions beyond the range of enemy cannon artillery. The BSA contains brigade organic support elements and DISCOM CSS elements placed in support of the brigade.

NOTE

The DISCOM configuration is fixed for a given type of division. The DISCOM structure is identical in every heavy division. Likewise, a light division has the same DISCOM structure as every other light division. However, light division DISCOM and heavy division DISCOM structures differ; support requirements for the two types of divisions are significantly different. Light, heavy, airborne, and air assault divisions each have different DISCOM structures.

HEAVY DIVISION DISCOM

MISSION

2-91. The DISCOM in any division provides DS-level maintenance, supply, transportation, and combat health support to all organic and attached elements of the division. It also provides aviation intermediate-level maintenance (AVIM) for division aircraft.

CAPABILITIES

2-92. The heavy division DISCOM provides support to one heavy division's organic and attached equipment. A forward support battalion's (FSB) base TOE is tailored to support either mechanized or armor units with respective system support teams (SSTs). The aviation support battalion's (ASB) TOE is tailored to provide both ground and aviation maintenance support to both the aviation brigade and the division cavalry squadron. The main support battalion's (MSB) base TOE is tailored to support division troop units operating in the division rear area. The MSB also provides backup and reinforcing support to the FSBs and ASB.

BASIS OF ALLOCATION

2-93. One DISCOM is allocated per heavy division. Figure 2-20 shows the organization of a heavy division DISCOM.

MOBILITY

2-94. See mobility of subordinate units.

UNITS

2-95. The heavy division DISCOM consists of—

- Headquarters, HHC/MMC.
- Multifunctional main support battalion (MSB).
- Multifunctional aviation support battalion (ASB).
- Three multifunctional forward support battalions (FSBs).

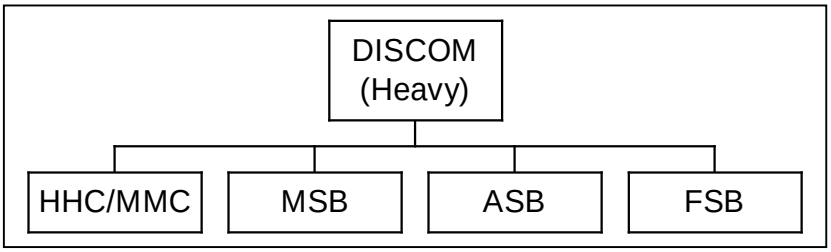

Figure 2-20. Typical Organization, DISCOM (Heavy Division)

FORCE XXI AND BEYOND…

The Force XXI DISCOM is similar to that of the Army of Excellence (AOE) DISCOM. However, the organizations, mission, and functions have changed significantly. The DISCOM is now comprised of an HHC, division support battalion (DSB), division aviation support battalion (DASB), and three FSBs. Each of the support battalions provides dedicated support to units operating within its respective support area. The biggest change to the DISCOM structure and capability is the redesign of the MSB into a DSB. The DSB is structured to provide support to division troop units operating in the division rear area only. It has a limited reinforcing capability to provide Class III (bulk) and common user transportation assets. Also, the main authorized stockage list (ASL) no longer exists in the division. Each of the support battalions maintains a tailored ASL for the units it supports. The division depends on the distribution system to fill requests for supplies that are not available from the ASL.

The DISCOM headquarters has undergone reorganization. The major changes made to the headquarters were the addition of a distribution management center (DMC) and the inclusion of the materiel management function within the DISCOM support operations section. The DMC is the fusion center for all distribution management functions. The DMC maintains in-transit visibility of materiel in the distribution pipeline. Based on the tactical situation, the DMC has the ability to reroute critical resources to where they are needed the most. The support operations section also has the materiel management functions. The support operations officer now has the capability to gather critical information on supply and maintenance issues and to make decisions on how to best support the tactical situation.

FM 63-2-2, *Division Support Command (Digitized)*, provides an in-depth discussion of Force XXI DISCOM operations.

MAIN SUPPORT BATTALION (HEAVY DIVISION)

MISSION

2-96. The MSB, TOE 63135A, a multifunctional organization fixed in structure, is the division's logistics and medical operator in the division rear area. It provides DS-level support to division units in the division rear area and reinforcing support to the forward and aviation support battalions. The MSB operates in the DSA, but it provides support forward in the division sector as required. It also provides backup DS-level maintenance support to the FSB.

NOTE

The heavy division MSB has a headquarters and headquarters detachment separate from other companies in the battalion.

CAPABILITIES

2-97. See respective subordinate units.

BASIS OF ALLOCATION

2-98. One MSB (heavy division) is allocated per DISCOM. Figure 2-21 shows the organization of an MSB (heavy division).

MOBILITY

2-99. The headquarters is 100 percent mobile.

UNITS

2-100. The heavy division MSB consists of—

- HHD.
- Supply and service company.
- Transportation motor transport company.
- Electronic maintenance company.
- Main maintenance company.
- Medical company.

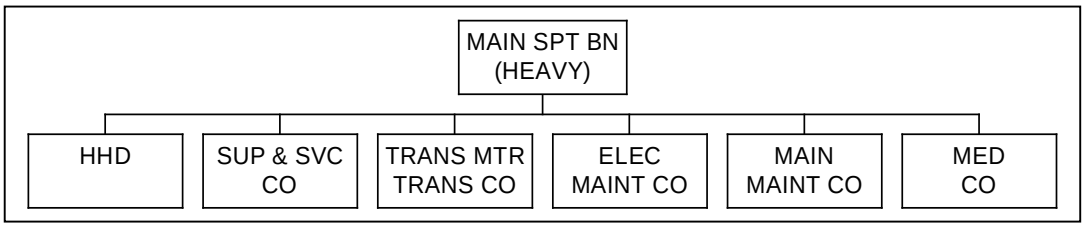

Figure 2-21. Typical Organization, MSB (Heavy Division)

HEAVY MAINTENANCE COMPANY, MAIN SUPPORT BATTALION (HEAVY DIVISION)

MISSION

2-101. The heavy maintenance company, TOE 43008A, provides DS-level conventional maintenance to divisional units not supported by FSBs or ASB. It provides backup maintenance to FSB maintenance companies.

CAPABILITIES

2-102. This unit provides DS-level maintenance for—

- Automotive equipment.
- Artillery equipment.
- Engineer equipment.
- Power-generation equipment.
- Fire control instruments.
- Fire control computer equipment.
- Metalworking/machining.
- Canvas.
- Small arms.
- Tank turrets.
- Quartermaster equipment.
- Utilities equipment.

ADDITIONAL CAPABILITIES

2-103. The heavy maintenance company also provides—

- Base shop and on-site maintenance support for division rear units, except the aviation brigade.
- Limited backup support for maintenance companies of the forward support battalions.
- Backup recovery assistance to supported units.
- Technical assistance to units in the division with organic unit maintenance elements.
- Unit-level maintenance on organic equipment.

Individuals of this organization can assist in the coordinated defense of the unit's area or installation.

2-104. This unit is dependent on—

- The headquarters and headquarters detachment, main support battalion, TOE 63136A000, for food service, unit administration, and religious services.
- Appropriate elements of the division or corps for combat health support, legal, finance, and personnel and administrative services.
- The division materiel management center (DMMC), TOE 63002A000, for centralized materiel management within the division.

BASIS OF ALLOCATION

2-105. One per main support battalion, heavy division, TOE 63135A000. Figure 2-22 shows the organization of a heavy maintenance company, MSB (heavy division).

MOBILITY

2-106. This unit—

- Is capable of transporting 310,200 pounds (16,145 cubic feet) of TOE equipment with organic vehicles.
- Has 141,221 pounds (12,706 cubic feet) of TOE equipment requiring transportation.
- Requires 50 percent of its TOE equipment and supplies to be transported in a single lift using its authorized organic vehicles.

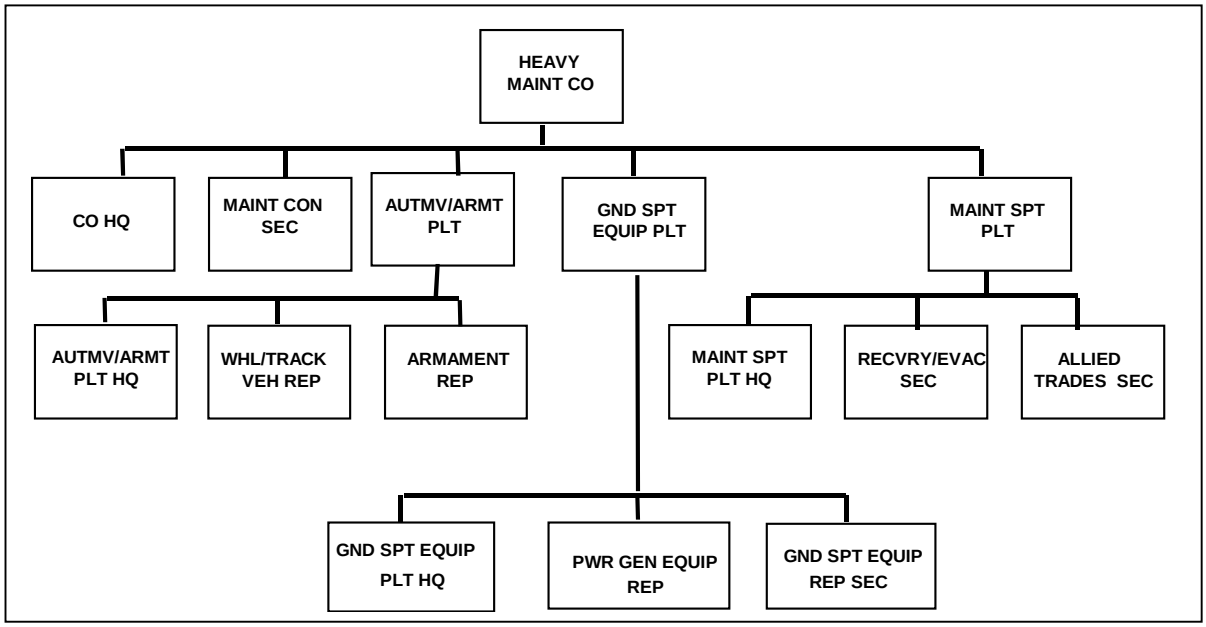

Figure 2-22. Typical Organization, Heavy Maintenance Company, MSB (Heavy Division)

ELECTRONIC MAINTENANCE COMPANY, MAIN SUPPORT BATTALION (HEAVY DIVISION)

MISSION

2-107. To provide DS-level electronic test and diagnostic maintenance (base shop and MSTs) for land combat missile systems, divisional air defense systems, target acquisition and surveillance radar, and Class IX supply support to divisional units (except signal, military intelligence [MI], combat electronic warfare intelligence [CEWI], and aviation units).

CAPABILITIES

2-108. This unit provides DS-level maintenance for—

- Close combat anti-armor weapon systems.
- Target acquisition and surveillance radar (except signal-peculiar).
- Divisional air defense systems.
- Communications-electronics, radio, fuel and electric systems.
- Land combat missile systems.
- Manportable common thermal night sights.

- Multiple-launch rocket systems.

NOTE

The company provides Class IX supply support for all divisional supported units, including RX service for missile, electronic, and conventional LRUs.

ADDITIONAL CAPABILITIES

2-109. The electronic maintenance company also provides—

- Electronic test and diagnostics down to the shop replaceable unit (SRU) level, including SRU screening for supported units.
- Base shop maintenance for air defense systems, land combat missile systems, communications and electronic equipment, manportable common thermal night sights, target acquisition and surveillance radar, and fuel and electric systems.
- Maintenance support teams for on-site maintenance support of land combat missile systems (TOW/Dragon and MLRS).
- An ASL of approximately 6000 lines of Class IX repair parts (common and missile), managed under the Standard Army Retail Supply System (SARSS-1).
- An RX service for approximately 500 selected items; maintains approximately 1000 lines of shop stock for the DS maintenance base shops.
- Technical assistance and prescribed load list (PLL) supply support to supported units.
- Unit-level maintenance on all organic equipment.

Individuals of this organization can assist in the coordinated defense of the unit's area or installation.

2-110. This unit is dependent on—

- Headquarters and headquarters detachment, main support battalion, TOE 63136A000, for food service, unit administration, and religious services.
- Appropriate elements of the division or corps for combat health support, legal, finance, and personnel and administrative services.
- Division materiel management center (DMMC), TOE 63002A000, for centralized materiel management within the division.

BASIS OF ALLOCATION

2-111. One per main support battalion, heavy division, TOE 63135A000. Figure 2-23 shows the organization of an electronic maintenance company, MSB (heavy division).

MOBILITY

2-112. This unit requires 80 percent of its TOE equipment and supplies to be transported in a single lift using its authorized organic vehicles. All MSTs

must be 100 percent mobile and will consist of two personnel to help with maintenance and provide security in transit.

AUGMENTATION TEAMS

2-113. The unit may be further augmented by the base shop test facility (BSTF) augmentation team, TOE 09510LA, when the organic BSTF exceeds its workload.

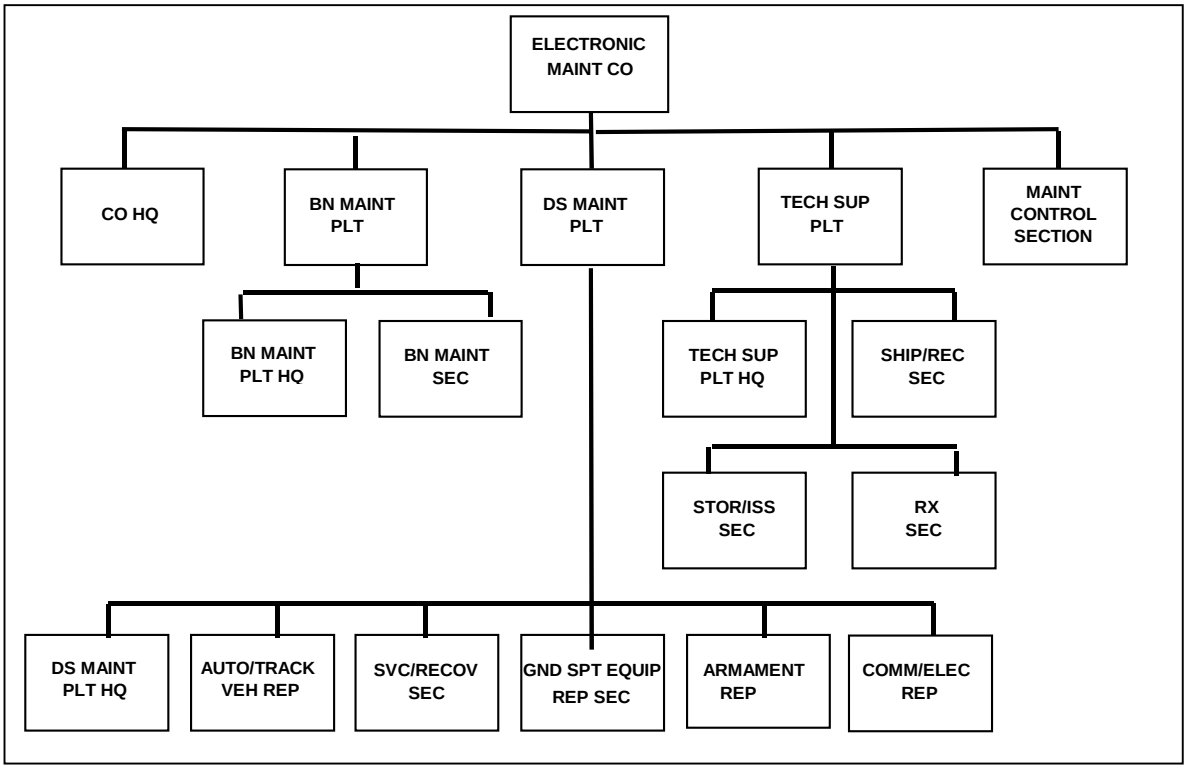

Figure 2-23. Typical Organization, Electronic Maintenance Company, MSB (Heavy Division)

FORCE XXI

FORCE XXI AND BEYOND…

The Division Support Battalion (DSB) replaces the Main Support Battalion in the Force XXI division. The DSB primary mission is to provide support to division troops operating in the division rear area. Unlike the MSB, the DSB has a limited backup and reinforcing mission and capability. The DSB provides reinforcing Class III (bulk) and common user transportation support for the FSB and DASB. It maintains a one-half-day supply of the division's Class III (bulk) requirements. Also, the DSB has heavy (heavy equipment transporters) and medium truck (palletized load systems) platoons used in support of FSB, DASB, and division operations.

The Area Support Maintenance Company (ASMC) within the DSB provides field-level maintenance support to division troop units operating in the division rear area. The ASMC does not provide any backup support to the FSBs or DASB. Also, ASMC has no fuel and electric or allied trades capability. In addition, the Class IX ASL, normally maintained in the Electronic Maintenance Company of the MSB, Heavy Division, is now maintained in the Quartermaster Company of the DSB. This ASL consists of those repair parts required to support the division troop units. The DSB depends on the distribution system to provide those parts not available from the ASL.

FM 63-21-1, *Division Support Battalion (Digitized)*, provides an in-depth discussion of Force XXI DSB operations.

FORWARD SUPPORT BATTALION (HEAVY DIVISION)

MISSION

2-114. The FSB provides division-level DS-level maintenance, supply, and combat health support to a heavy division brigade and other units operating in the BSA.

COMMAND SUPPORT

2-115. The FSB commander is responsible for assigned units and the CSS mission. The battalion staff assists and advises the battalion commander in accomplishing the support mission. The FSB commander advises the brigade commander on how the unit CSS elements can best support the tactical plan. The FSB commander coordinates requirements for additional support through the DMMC, the DISCOM staff, or DISCOM commander. The brigade S4 is the key link between the brigade and the FSB. The brigade S4 monitors the tactical situation and coordinates with the FSB staff to ensure that maintenance support is continuous and responsive to the needs of combat units.

SUPPORT OPERATIONS SECTION

2-116. The support operations section is responsible for supervising all FSB CSS support activities. These activities include DS-level maintenance, supply, and combat health support for units employed in the brigade area. This section serves as interface with the brigade S4, the DISCOM headquarters supply and services and transportation staff officers, the DMMC, and the MSB in resolving maintenance, supply, field services, and transportation support requests and priorities.

NOTE

The heavy division FSB also has an HHD separate from the companies in the battalion. Unlike the MSB, the FSB has no transportation support capability in its structure, and it has no field service capability in its supply company. All of the FSB's maintenance capabilities are consolidated in a single maintenance company.

CAPABILITIES

2-117. See respective subordinate units.

MOBILITY

2-118. The headquarters detachment is 100 percent mobile.

BASIS OF ALLOCATION

2-119. One per brigade; assigned to DISCOM. Figure 2-24 shows the organization of a heavy division FSB.

UNITS

2-120. The heavy division FSB consists of—

- Headquarters and headquarters detachment.
- Supply company.
- Maintenance company.
- Medical company.

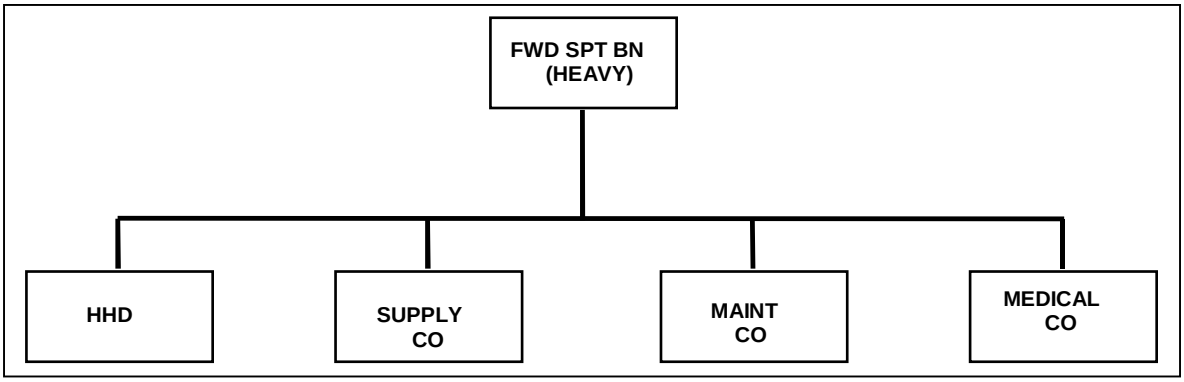

Figure 2-24. Typical Organization, FSB (Heavy Division)

MAINTENANCE COMPANY, FORWARD SUPPORT BATTALION (HEAVY DIVISION)

MISSION

2-121. To provide DS-level maintenance and common repair parts supply support to attached and supporting units of a brigade of a heavy division.

CAPABILITIES

2-122. Provides DS-level maintenance to all brigade equipment except medical, COMSEC, air drop, avionics, aircraft, aircraft armament, and munitions. Maintains an ASL of up to 3000 lines. Provides RX service of selected items. MSTs provide on-site maintenance.

ADDITIONAL CAPABILITIES

2-123. The maintenance company also provides—

- Inspection, diagnosis, and repair of inoperable vehicles and weapon systems.
- Limited recovery capability for supported units.
- Consolidated unit-level maintenance for attached units operating in the BSA.

The company is tailorable to support mechanized, armor, or mixed battalions by addition of TOE 43510LA and 43510LB system support teams.

2-124. This unit is dependent on—

- Appropriate elements of the division for legal, religious and combat health support.
- Appropriate elements of the division for finance, personnel, administrative, and ADP support; for transportation and supplemental stockage of selected major assemblies, RX items, and major end items; and for evacuation of unserviceable items and vehicles.
- Headquarters and headquarters detachment, TOE 63216L00, for food service support.

- Electronic maintenance company, MSB, TOE 43218L000, for unit maintenance of utilities equipment and DS-level maintenance of TOW/Dragon missile systems.

BASIS OF ALLOCATION

2-125. One per forward support battalion. Normally employed in the BSA. Figure 2-25 shows the organization of a maintenance company, FSB (heavy division).

MOBILITY

2-126. This unit—

- Is capable of transporting 84,400 pounds (4,940 cubic feet) of TOE equipment with organic vehicles.
- Has 67,484 pounds (8,299 cubic feet) of TOE equipment requiring additional transportation.
- Requires that 100 percent of its TOE equipment and supplies be transported in a single lift using its authorized organic vehicles

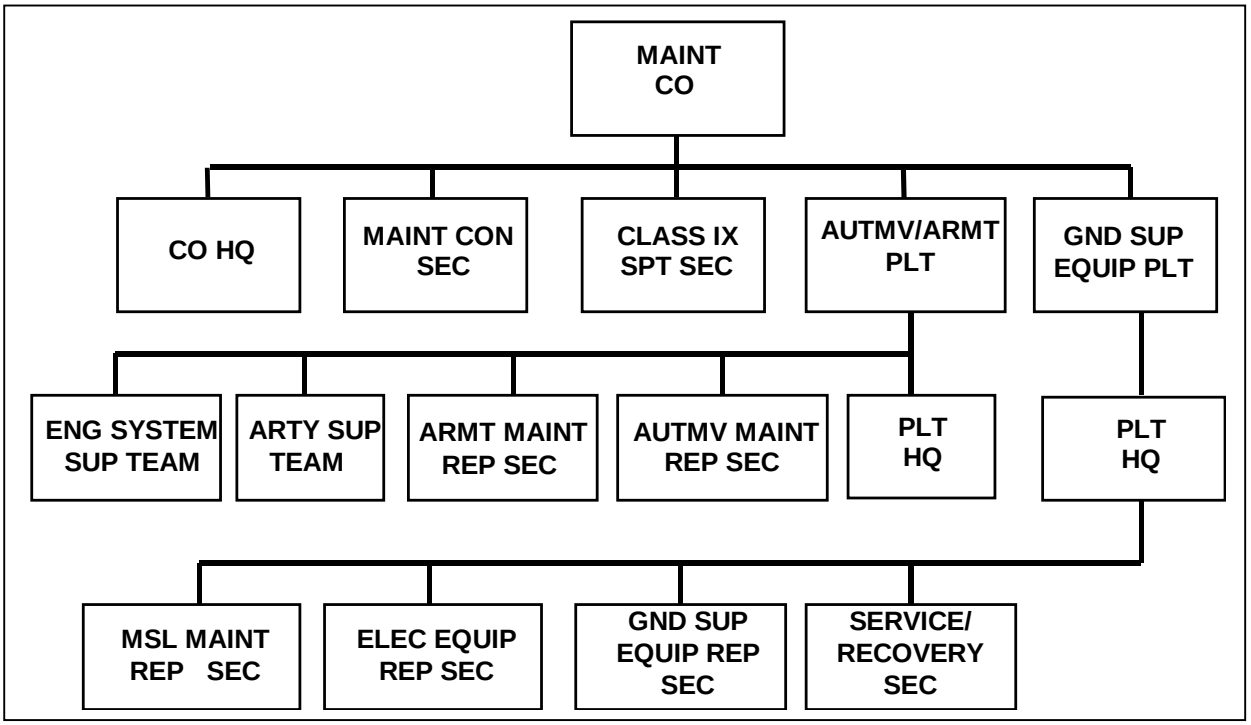

Figure 2-25. Typical Organization, Maintenance Company, FSB (Heavy Division)

FORCE XXI AND BEYOND…

The Forward Support Battalion (FSB) in the Force XXI division has changed more than any other unit. Structurally, the FSB now is composed of an HHC, Base Support Company (BSC), Medical Company, and three Forward Support Companies (FSCs). The BSC and the FSCs are multifunctional companies that provide supply, distribution, and field-level maintenance support to units operating as part of the brigade combat team (BCT). Operations in the FSB are planned and coordinated through the FSB support operations section. Unlike AOE FSBs, each company now has a support operations section that performs similar planning and coordination functions for maneuver task forces and other units operating in the brigade area.

Maintenance capabilities exist in the BSC and each FSC. The BSC and FSCs provide consolidated organizational and direct support maintenance for units operating in the brigade, except for the DS artillery battalion. The BSC provides field-level maintenance support to itself, HHC brigade, brigade reconnaissance troop, and engineer battalion. It also provides DS-level maintenance support to the DS artillery battalion in support of the brigade. FSCs provide field-level maintenance support to their specific maneuver task force.

The maintenance control section (MCS) has become the manager of all field maintenance for the units it supports. The MCS is responsible for maintaining the Army maintenance management system (TAMMS) automated records. The MCS provides dispatching functions. Finally, the MCS plans for, schedules, and workloads maintenance sections to perform both scheduled service and unscheduled maintenance. The MCS manages maintenance using a combination of ULLS-G and SAMS-1. With the fielding of GCSS-Army, the MCS will manage maintenance operations using the maintenance module of GCSS-Army.

FM 63-20-1, *Forward Support Battalion (Digitized)*, provides an in-depth discussion of Force XXI FSB operations.

AVIATION SUPPORT BATTALION (HEAVY DIVISION)

MISSION

2-127. The ASB is the newest multifunctional battalion in the division support command structure. It is organized to provide responsive multifunctional DS-level support, ground, air, and missile, to include armament, avionics, and aviation-peculiar ground support equipment and aircraft repair parts support to a heavy division's aviation units, including the division cavalry squadron. The ASB is tailored to the mix of aviation battalions.

CAPABILITIES

2-128. See subordinate unit.

BASIS OF ALLOCATION

2-129. One per aviation brigade heavy division. Normally located at the divisional airfield in the division rear area. Figure 2-26 shows an aviation support battalion (heavy division).

MOBILITY

2-130. Unit headquarters detachment is 100 percent mobile.

UNITS

2-131. The heavy division ASB consists of—

- Headquarters and supply company (HSC).
- Ground maintenance company (GMC).
- AVIM company.

NOTE

The HSC includes the battalion headquarters, a petroleum storage and distribution section, an ammunition-handling section, and a general supply storage and distribution section.

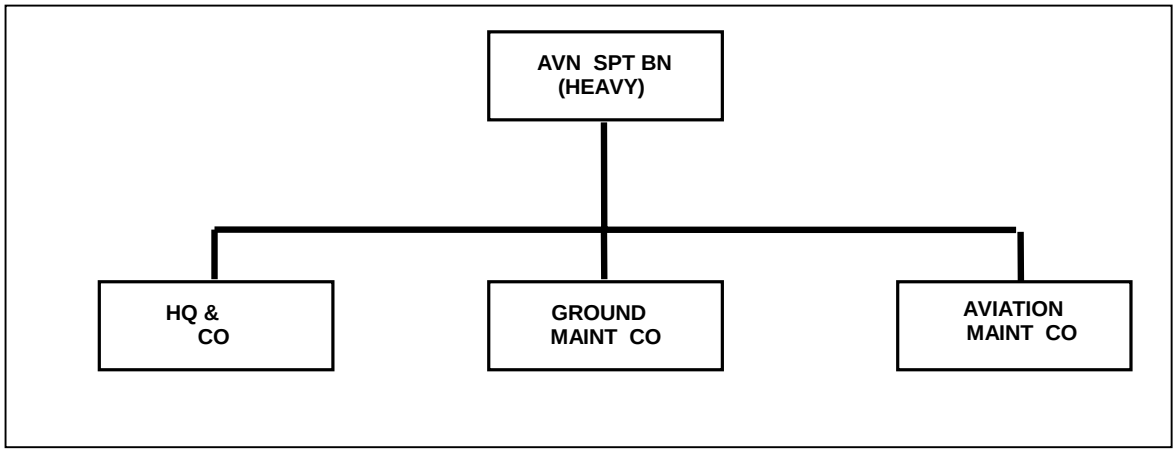

Figure 2-26. Typical Organization, Aviation Support Battalion (Heavy Division)

GROUND MAINTENANCE COMPANY, AVIATION SUPPORT BATTALION (HEAVY DIVISION)

MISSION

2-132. To provide conventional DS-level maintenance and Class IX supply support to the division aviation brigade and cavalry squadron, heavy division.

CAPABILITIES

2-133. The ground maintenance company provides—

- ASL of approximately 6000 lines of Class IX repair parts (4000 aviation and 2000 common) managed under SARSS-1.
- RX service for approximately 550 selected items; maintains approximately 1000 lines of shop stock for the DS maintenance shops.
- Technical assistance for organizational maintenance and PLL supply support to brigade units.
- Backup recovery capability to supported units.
- On-site combat-system-oriented maintenance support to the cavalry squadron.
- Consolidated unit-level maintenance to the three units organic to the division aviation support battalion.

Individuals of this organization can assist in a coordinated defense of the unit's area or installation. This unit performs unit-level maintenance on organic equipment.

2-134. The company is dependent on—

- Appropriate elements of the division or corps for legal, finance, and personnel and administrative service, unit-level administration, and religious support.
- Headquarters and supply company, aviation support battalion, TOE 63885A100, 200, 300, or 400 for food service support.
- MSB, heavy division, TOE 63135L, for missile maintenance, field services, water supply, combat health support, and supplemental ground transportation.
- Appropriate elements of the division aviation brigade for logistics airlift support.

BASIS OF ALLOCATION

2-135. One per aviation support battalion, heavy division, TOE 63885A100, 200, 300, or 400. Figure 2-27 shows the organization of a ground maintenance company, ASB (heavy division).

MOBILITY

2-136. This unit—

- Is capable of transporting 881,400 pounds (34,629 cubic feet) of TOE equipment with organic vehicles.
- Has 215,545 pounds (20,874 cubic feet) of TOE equipment requiring transportation.

- Requires that 75 percent of its TOE equipment and supplies be transported in a single lift using its authorized organic vehicles.

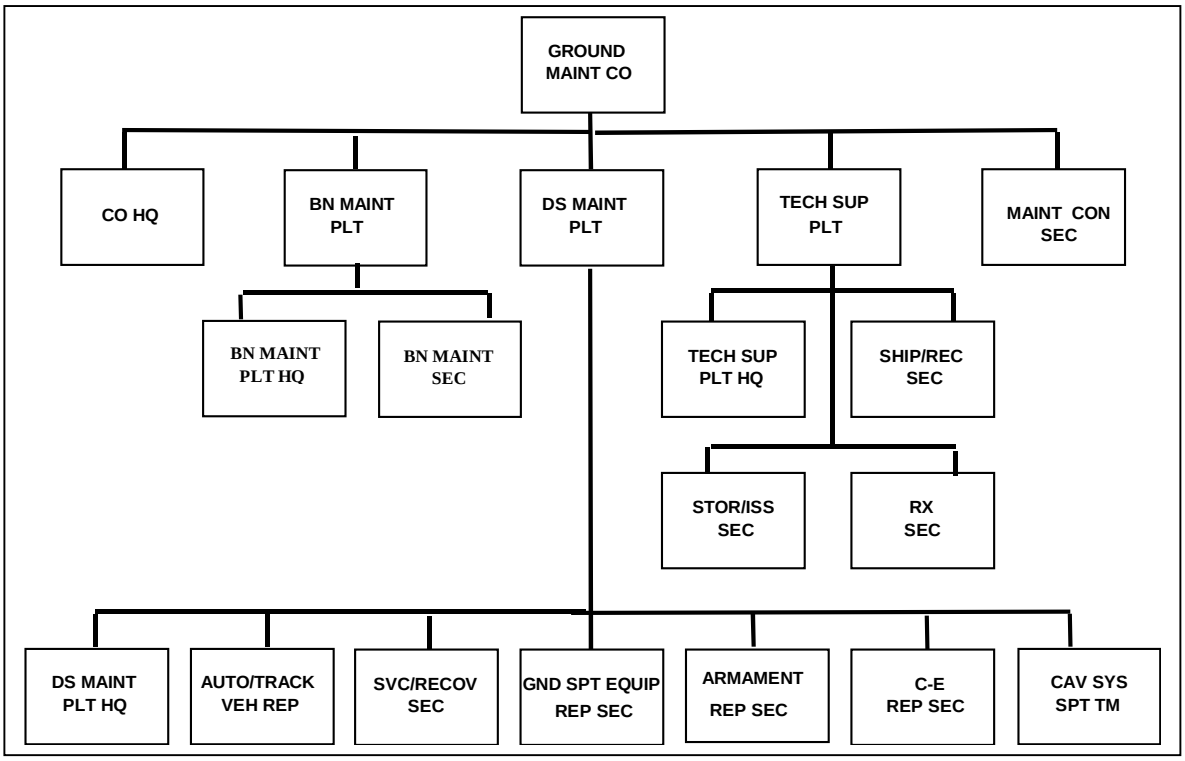

Figure 2-27. Typical Organization, Ground Maintenance Company, ASB (Heavy Division)

FORCE XXI

FORCE XXI AND BEYOND…

The Division Aviation Support Battalion (DASB) performs the same mission and function as the ASB did in AOE. The DASB is organized in much the same manner as the ASB. The biggest change is that the ground ASL that was maintained in the GMC is now maintained by the HSC. The GMC performs all other missions that it previously performed.

FM 63-23-2, *Division Aviation Support Battalion (Digitized)*, provides an in-depth discussion of Force XXI DASB operations.

LIGHT DIVISION DISCOM

MISSION

2-137. Provides CSS to assigned and attached units in the sector through organic units.

NOTE

The light division DISCOM is similar in basic structure to the heavy division DISCOM. It has multifunctional battalions (MSB and FSB) that are employed like the structure of the heavy division DISCOM. However, there are differences in structure between the light division MSB and FSB.

CAPABILITIES

2-138. Provides support to one light infantry division's organic and attached equipment. Provides support of all classes of supplies; provides DS-level maintenance and aviation intermediate maintenance support for all materiel organic to the division. Provides limited transportation for personnel, supplies, and equipment and provides combat health support. The light DISCOM has limited capabilities to support the division for sustained operations. The DISCOM requires backup aviation intermediate-level maintenance (AVIM), ground transportation, airlift support, and combat health support.

MOBILITY

2-139. See mobility of specific subordinate units.

UNITS

2-140. The light division DISCOM consists of—

- Headquarters and Headquarters Company/MMC.
- Multifunctional MSB.
- Three multifunctional FSBs.
- Aviation maintenance company (AMCO).

BASIS OF ALLOCATION

2-141. One per light division. Figure 2-28 shows the organization of a DISCOM for a light division.

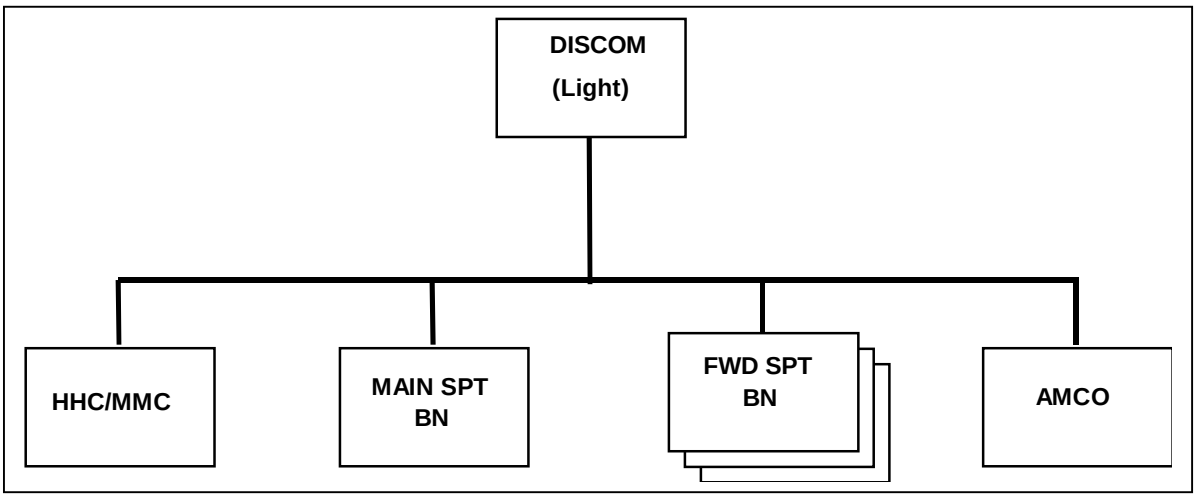

Figure 2-28. Typical Organization, Light Division DISCOM

MAIN SUPPORT BATTALION (LIGHT DIVISION)

MISSION

2-142. The MSB, a multifunctional organization fixed in structure, is the division's logistics and medical operator in the division rear area. It provides DS-level support to division units in the division rear area and reinforcing support to the forward support battalions and aviation maintenance company. The MSB operates in the DSA, but it provides support forward in the division sector as required. It also provides backup DS-level maintenance support to the FSB.

NOTE

The battalion headquarters element of the light division MSB is consolidated with the supply company to form an HSC. The MSB HSC, when augmented, has the capability to provide mortuary affairs, laundry, shower, and clothing and light textile repair.

UNITS

2-143. The light division MSB consists of—

- Headquarters and supply company.
- maintenance company.
- Medical company.
- Transportation motor transport company.

BASIS OF ALLOCATION

2-144. One per light division DISCOM. Figure 2-29 shows the organization of an MSB (light division).

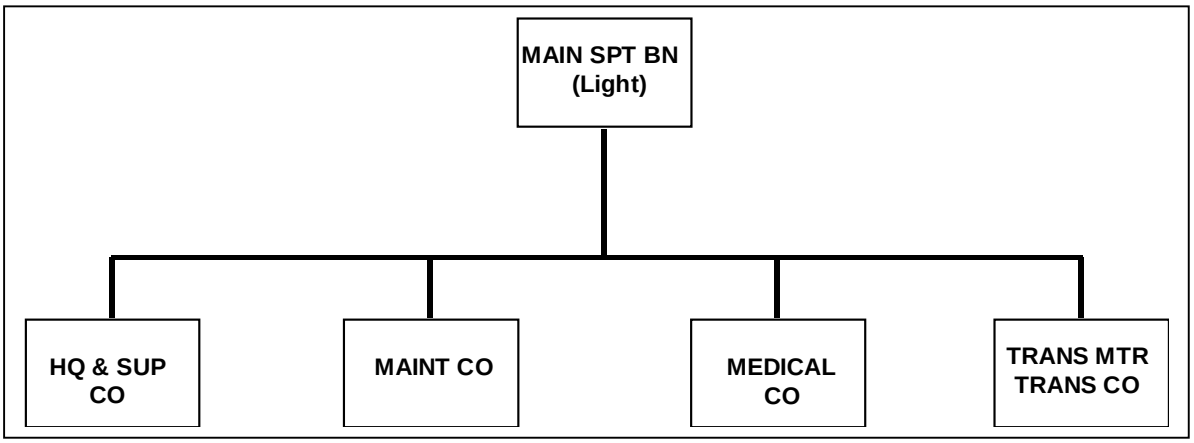

Figure 2-29. Typical Organization, MSB (Light Division)

MAINTENANCE COMPANY, MAIN SUPPORT BATTALION (LIGHT DIVISION)

MISSION

2-145. To provide DS-level maintenance and repair parts supply support to the division troops operating in the division rear area.

CAPABILITIES

2-146. This unit provides DS-level maintenance for—

- Fire control equipment.
- Artillery.
- Power generation equipment.
- Engineer equipment.
- Quartermaster/chemical equipment.
- Wheeled vehicles.
- Radar.
- Communications equipment.
- TOW/Dragon missile systems.

The maintenance company also provides—

- 4000-line ASL.
- Inspection, diagnosis, and repair of vehicle and weapon systems.
- Limited recovery capability for supported units.
- Consolidated unit-level maintenance for battalion units.
- Technical assistance to supported units.

Individuals of this organization can assist in a coordinated defense of the unit's area or installation.

2-147. This unit is dependent on—

- Appropriate elements of the division for legal, religious, and combat health support.
- Appropriate elements of the corps for finance, personnel and administrative, and ADP support; for transportation and supplemental stockage of selected major assemblies, RX items, and major end items; and for evacuation of unserviceable items and vehicles.
- Corps for backup DS-level maintenance support.

BASIS OF ALLOCATION

2-148. One per main support battalion. Figure 2-30 shows the organization of a maintenance company, MSB (light division).

MOBILITY

2-149. This unit requires that 75 percent of its TOE equipment and supplies be transported in a single lift using its authorized organic vehicles.

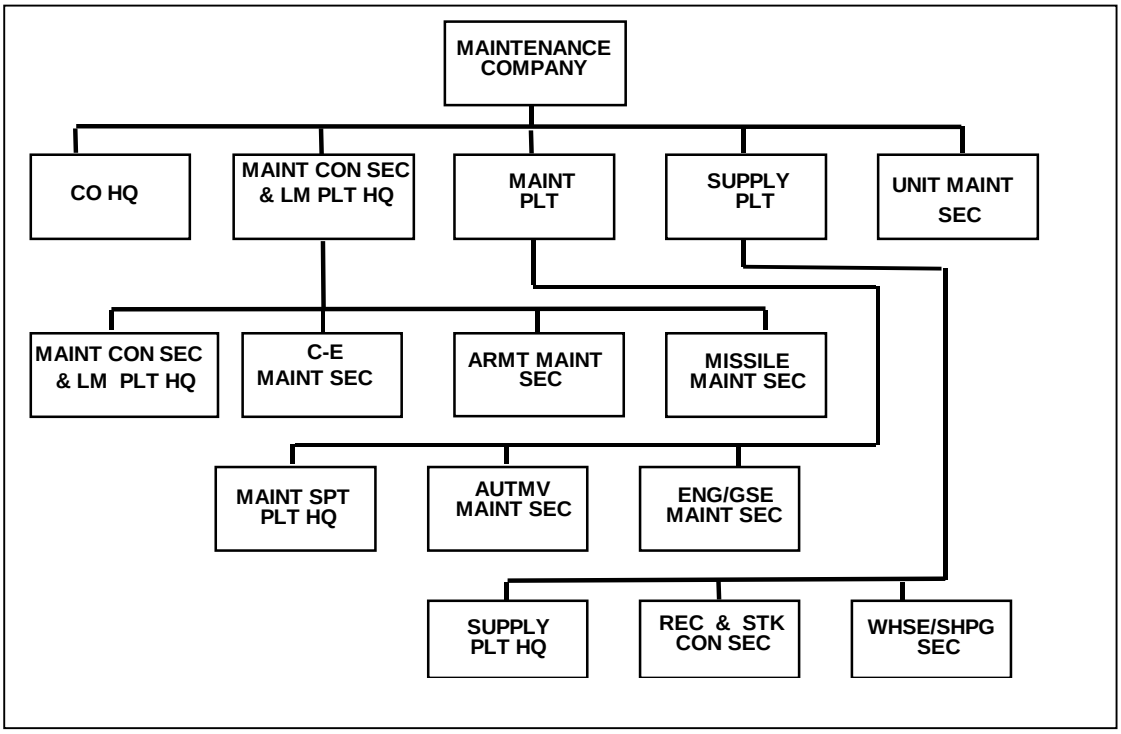

Figure 2-30. Typical Organization, Maintenance Company, MSB (Light Division)

FORWARD SUPPORT BATTALION (LIGHT DIVISION)

MISSION

2-150. The FSB, light division (LD), provides DS-level maintenance, supply, and combat health support to a light division brigade and other units in the BSA.

NOTE

The battalion headquarters element of the light division FSB is consolidated with the supply company to form an HSC. The HSC has the capability to operate an ammunition transfer point (ATP).

UNITS

2-151. The light division FSB consists of—

- Headquarters and supply company.
- Maintenance company.
- Medical company.

Figure 2-31 shows the organization of a light division FSB.

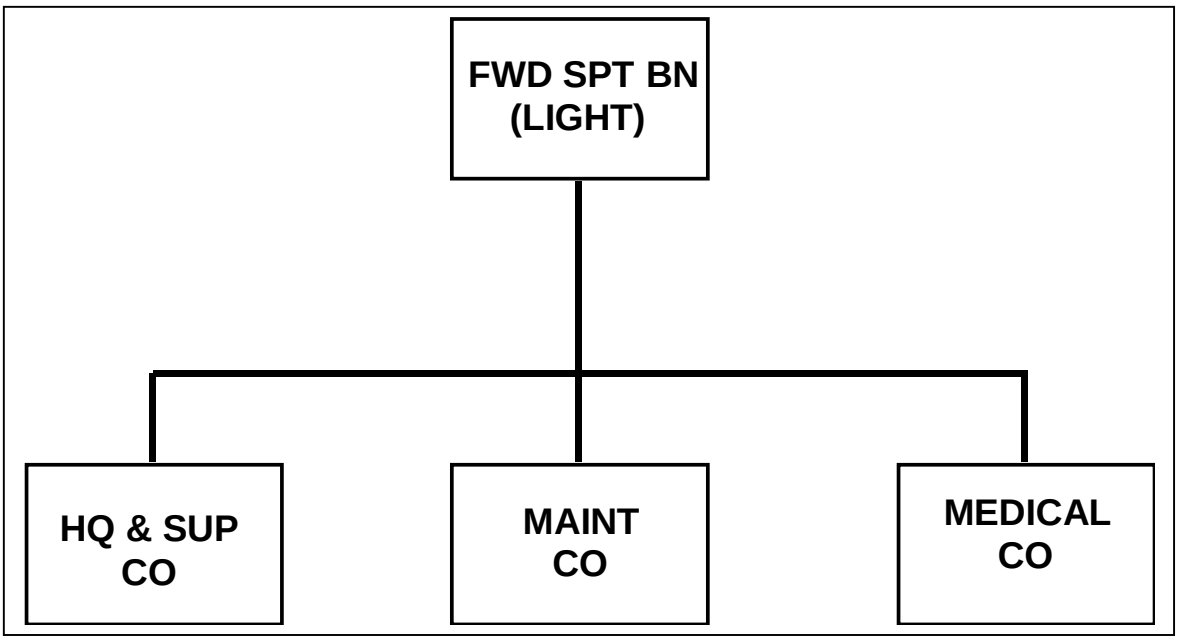

Figure 2-31. Typical Organization, Forward Support Battalion (Light Division)

MAINTENANCE COMPANY, FORWARD SUPPORT BATTALION (LIGHT DIVISION)

MISSION

2-152. To provide DS-level maintenance commensurate with stated capabilities and repair parts supply to a maneuver brigade, light infantry division.

CAPABILITIES

2-153. This unit provides DS-levelmaintenance for—

- Fire control equipment.
- Artillery.
- Power generation equipment.
- Quartermaster/chemical equipment.
- Wheeled vehicles.
- Small arms.
- Communications equipment.
- Special electronic devices.

The maintenance company also provides—

- Inspection, diagnosis, and repair of vehicles and weapon systems.
- Limited recovery capability for supported units.
- Consolidated unit-level maintenance for battalion units.

Individuals of this organization can assist in a coordinated defense of the unit's area or installation.

2-154. This unit is dependent on—

- Appropriate elements of the division for legal, religious, and combat health support.
- Appropriate elements of the corps for finance, personnel and administrative, and ADP support; for transportation and supplemental stockage of selected major assemblies, RX items, and major end items; and for evacuation of unserviceable items and vehicles.
- Headquarters and supply company, TOE 63216L00, for food service support.
- Maintenance company, MSB, TOE 43218L000, for unit maintenance of utilities equipment and DS maintenance of TOW/Dragon systems.

BASIS OF ALLOCATION

2-155. One per forward support battalion. Figure 2-32 shows the organization of a maintenance company, FSB (light division).

MOBILITY

2-156. This unit—

- Is capable of transporting 84,400 pounds (4,940 cubic feet) of TOE equipment with organic vehicles.

- Has 67,484 pounds (8,299 cubic feet) of TOE equipment requiring additional transportation.
- Requires that 100 percent of its TOE equipment and supplies be transported in a single lift using its authorized organic vehicles.

The electronic maintenance teams will be 100 percent mobile, consisting of two personnel to provide assistance with required maintenance tasks and security/safety in transit.

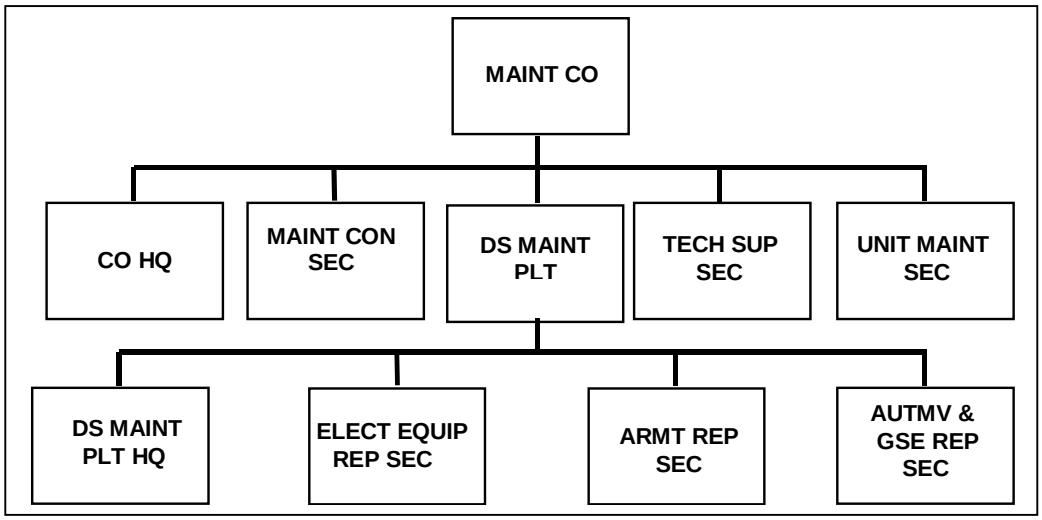

Figure 2-32 Typical Organization, Maintenance Company, FSB (Light Division)

AIRBORNE DIVISION DISCOM

2-157. The airborne division DISCOM is similar in basic structure to the heavy and light division DISCOM. It has multifunctional battalions (MSB and FSBs) and a functional aviation maintenance company. However, the airborne MSB has two maintenance companies (light and heavy) and an airborne equipment support company.

UNITS

2-158. The airborne division DISCOM consists of—

- HHC/MMC.
- Multifunctional MSB.
- Three multifunctional FSBs.
- Functional aviation maintenance company.

Figure 2-33 shows the organization of an airborne division DISCOM.

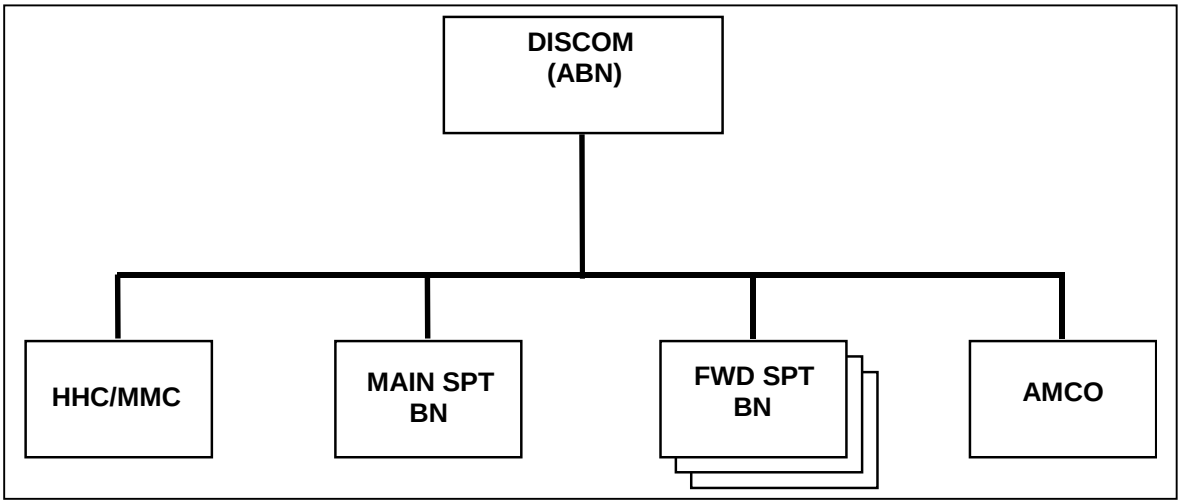

Figure 2-33. Typical Organization, Airborne Division, DISCOM

MAIN SUPPORT BATTALION (AIRBORNE DIVISION)

MISSION

2-159. The MSB, a multifunctional organization fixed in structure, is the division's logistics and medical operator in the division rear area. It provides DS-level support to division units in the division rear area and reinforcing support to the forward support battalions. The MSB operates in the DSA, but it provides support forward in the division sector as required.

NOTE

The airborne division MSB has an HSC separate from the other companies in the battalion. It also has an airborne equipment support company (riggers).

UNITS

2-160. The airborne division MSB consists of—

- Headquarters and supply company.
- Airborne equipment support company (riggers).
- Transportation motor transport company.
- Light maintenance company.
- Heavy maintenance company.
- Medical company.

Figure 2-34 shows the organization of an airborne division main support battalion.

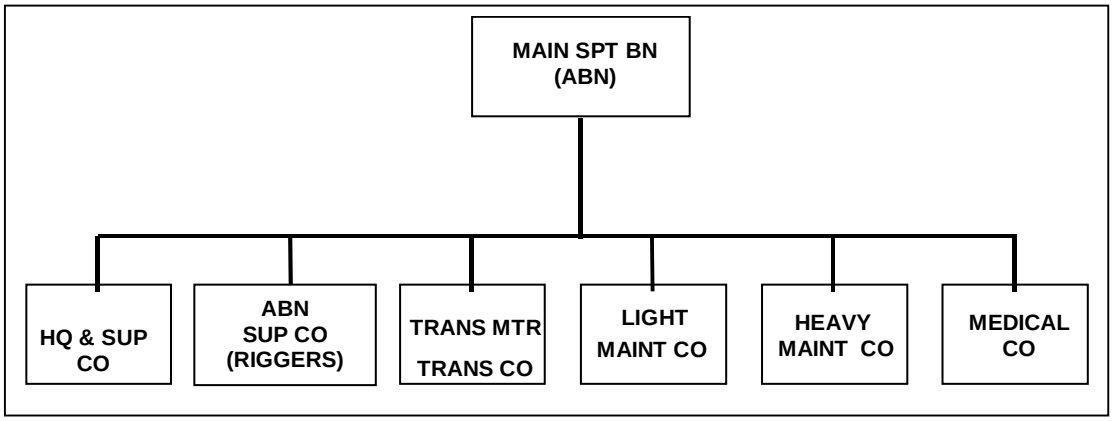

Figure 2-34. Typical Organization, Main Support Battalion (Airborne Division)

HEAVY MAINTENANCE COMPANY, MAIN SUPPORT BATTALION (AIRBORNE DIVISION)

MISSION

2-161. To provide DS-level maintenance and repair parts supply support to units deployed in the division support area and to provide reinforcing maintenance for the three forward maintenance companies of the forward support battalion.

CAPABILITIES

2-162. The heavy maintenance company provides—

- Backup and reinforcing maintenance support to the three forward maintenance companies.
- Limited backup recovery assistance to supported units.

Individuals of this organization can assist in a coordinated defense of the unit's area or installation. This unit is capable of performing unit maintenance on organic equipment.

2-163. This unit is dependent on—

- Appropriate elements of the division or corps for health services, legal, finance, and personnel and administrative services.
- Headquarters and supply company, TOE 63266L000, for food service support.
- Light maintenance company, TOE 63257L000, for organizational communications-electronics maintenance support.

BASIS OF ALLOCATION

2-164. One per main support battalion, airborne division, TOE 63225L000. Figure 2-35 shows the organization of a heavy maintenance company, MSB (airborne division).

MOBILITY

2-165. This unit—

- Can transport 194,100 pounds (10,877 cubic feet) of TOE equipment with organic vehicles.
- Requires that 50 percent of its TOE equipment and supplies be transported in a single lift using its authorized organic vehicles.

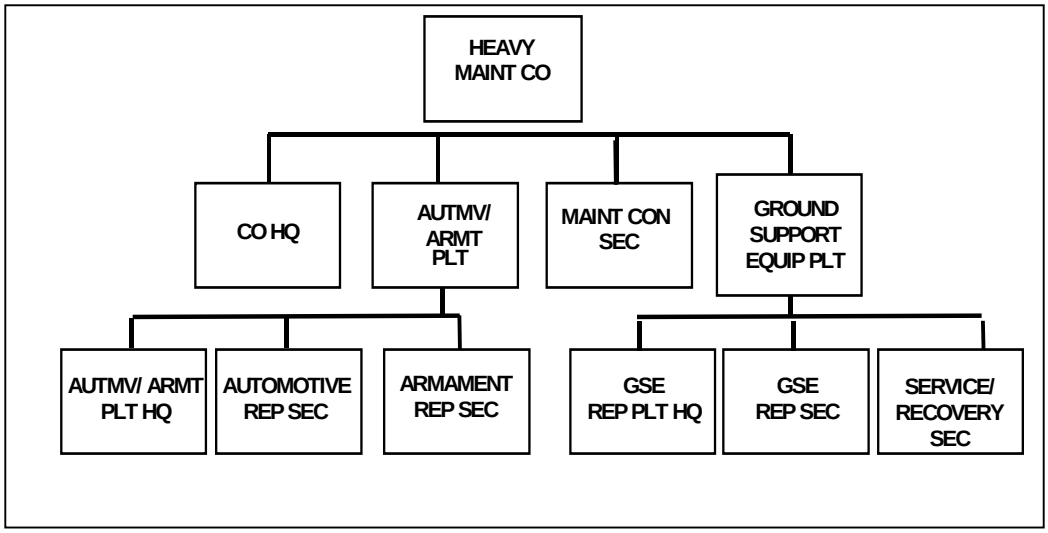

Figure 2-35. Typical Organization, Heavy Maintenance Company, MSB (Airborne Division)

LIGHT MAINTENANCE COMPANY, MAIN SUPPORT BATTALION (AIRBORNE DIVISION)

MISSION

2-166. To provide DS-level maintenance and common/missile repair parts supply support to units deployed in the division support area and to provide reinforcing maintenance for three forward maintenance companies located in the forward support battalions.

CAPABILITIES

2-167. This unit provides—

- DS-level maintenance on all authorized missile equipment, electronic and COMSEC equipment, and ADP equipment of units in the airborne division.
- Backup and reinforcing support to the three forward maintenance companies in the forward support battalions.
- Technical assistance for missile, electronic, COMSEC, and ADP equipment to divisional units.
- Common and missile repair parts supply support to units in the division area, and to the technical supply elements of the three forward maintenance companies.

- RX service for selected (common and missile) items.

Individuals of this organization can assist in a coordinated defense of the unit's area or installation. This unit is capable of performing unit-level maintenance on organic equipment and C-E organizational maintenance for the heavy maintenance company.

2-168. This unit is dependent on—

- Appropriate elements of the division or corps for combat health support, legal, religious, finance, and personnel/administrative services.
- Headquarters and supply company, TOE 63266L000, for food service support.
- Assault helicopter company, TOE 01147L000, for transportation of critical Class IX repair parts and major assemblies.
- HHC/MMC, TOE 6325L000, for centralized Class IX management and automated materiel management.

BASIS OF ALLOCATION

2-169. One per main support battalion, airborne division, TOE 63265L000. Figure 2-36 shows the organization of a light maintenance company, MSB (airborne division).

MOBILITY

2-170. This unit—

- Is capable of transporting 167,500 pounds (15,900 cubic feet) of TOE equipment with organic vehicles.
- Has 209,000 pounds (29,250 cubic feet) of TOE equipment requiring transportation.
- Is 100 percent mobile; MSTs will consist of two personnel to provide assistance with required maintenance tasks and security/safety in transit.

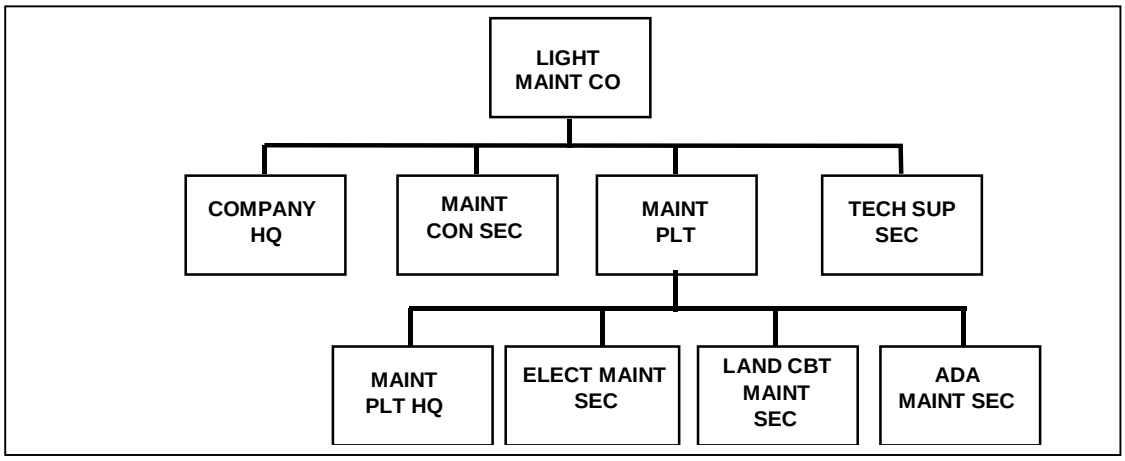

Figure 2-36. Typical Organization, Light Maintenance Company, MSB (Airborne Division)

FORWARD SUPPORT BATTALION (AIRBORNE DIVISION)

MISSION

2-171. The DISCOM has three FSBs, one for each division maneuver brigade, that provide DS-level support to all division units in the brigade sectors.

NOTE

The airborne division FSB also has an HSC separate from the companies in the battalion. Unlike the MSB, the FSB has no transportation support capability in its structure. Nor does it have field service capability in its supply company. All of the FSB's maintenance capabilities are consolidated in one maintenance company.

UNITS

2-172. The airborne division FSB consists of—

- Headquarters and supply company.
- Maintenance company.
- Medical company.

Figure 2-37 shows the organization of an airborne division forward support battalion.

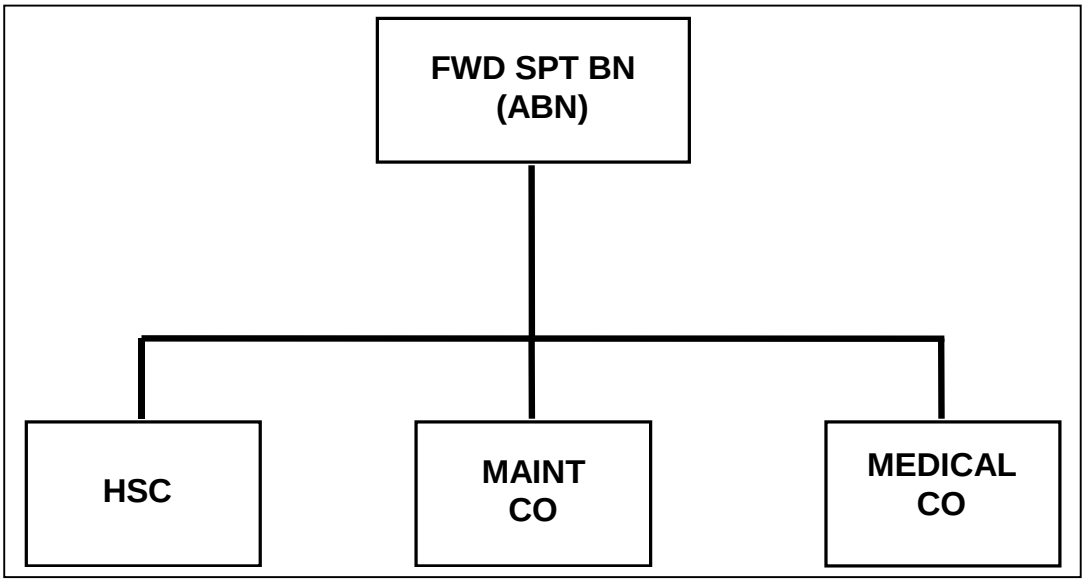

Figure 2-37. Typical Organization, Forward Support Battalion (Airborne Division)

MAINTENANCE COMPANY, FORWARD SUPPORT BATTALION (AIRBORNE DIVISION)

MISSION

2-173. To provide DS-level maintenance and common and missile repair parts supply support, commensurate with stated capabilities, to attached and supporting units of a maneuver brigade in an airborne division.

CAPABILITIES

2-174. The maintenance company provides—

- DS-level maintenance and missile repair parts supply support to supported units; maintains ASL of 1200 lines and RX service for 350 lines.
- Technical assistance to units in the brigade.

Individuals in this organization can assist in a coordinated defense of the unit's area or installation. This unit is capable of performing unit-level maintenance on organic equipment.

2-175. This unit is dependent on—

- Appropriate elements of the division or corps for combat health support, religious, legal, finance, and personnel/administrative services.
- Assault helicopter company, TOE 01147L000, for transportation of critical Class IX repair parts and major assemblies.
- HHC/MMC, TOE 63052L000, for centralized Class IX management and automated materiel management.
- TMT Company, TOE 55068L000, for transportation of Class IX supplies from division support area to brigade support area.

BASIS OF ALLOCATION

2-176. One per forward support battalion, airborne division. Figure 2-38 shows the organization of a forward maintenance company, FSB (airborne division).

MOBILITY

2-177. This unit is capable of transporting 93,000 pounds (8,150 cubic feet) of TOE equipment with organic vehicles. The unit has 106,800 pounds (15,200 cubic feet) of equipment requiring additional transportation.

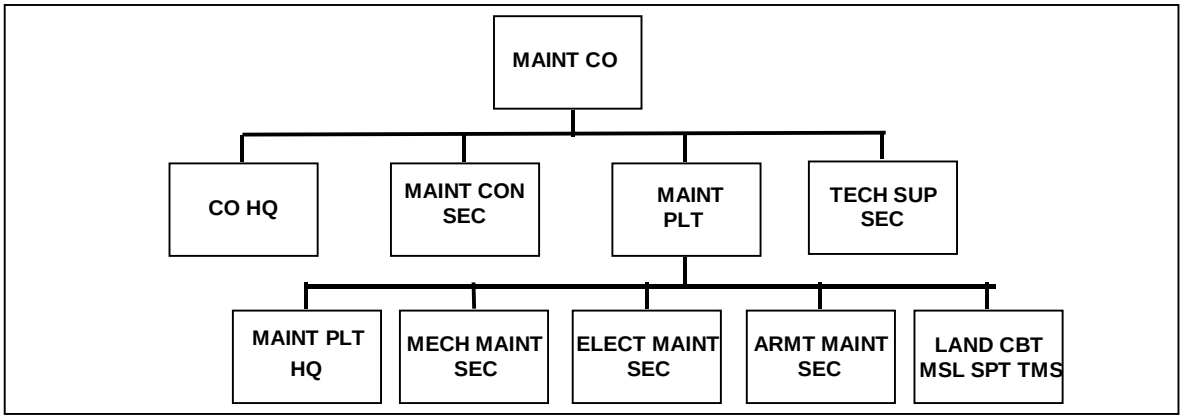

Figure 2-38 Typical Organization, Heavy Maintenance Company, MSB (Airborne Division)

AIR ASSAULT DIVISION DISCOM

2-178. The air assault division DISCOM includes both functional and multifunctional battalions. In addition to the multifunctional MSB and FSBs, the air assault division DISCOM has a functional aircraft maintenance battalion (AVIM) instead of a company to support its aviation assets. It also has an air ambulance company to enhance medical evacuation capability. These units are employed in much the same manner as the battalions in the heavy division DISCOM.

UNITS

2-179. The air assault division DISCOM consists of—

- HHC.
- Multifunctional MSB.
- Three multifunctional FSBs.
- AVIM battalion.
- Air ambulance company.

Figure 2-39 shows the organization of an air assault division DISCOM.

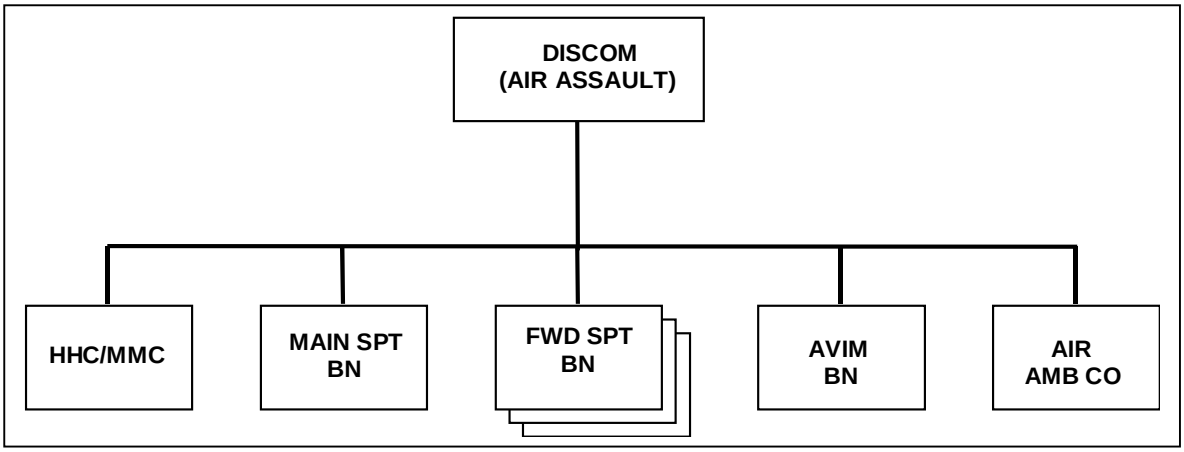

Figure 2-39. Typical Organization, Air Assault Division DISCOM

MAIN SUPPORT BATTALION (AIR ASSAULT DIVISION)

MISSION

2-180. The MSB, a multifunctional, fixed-structure organization, is the division's logistics and medical operator in the division rear area. It provides DS-level support to division units in the division rear area and designated and reinforcing support to the forward support battalion and aviation maintenance battalion. The MSB is based in the DSA, but it provides support forward in the division sector as required.

UNITS

2-181. The air assault division MSB consists of—

- Headquarters and supply company.
- Light maintenance company.
- Heavy maintenance company.
- Medical company.
- Transportation motor transport company.

Figure 2-40 shows the organization of an air assault division main support battalion.

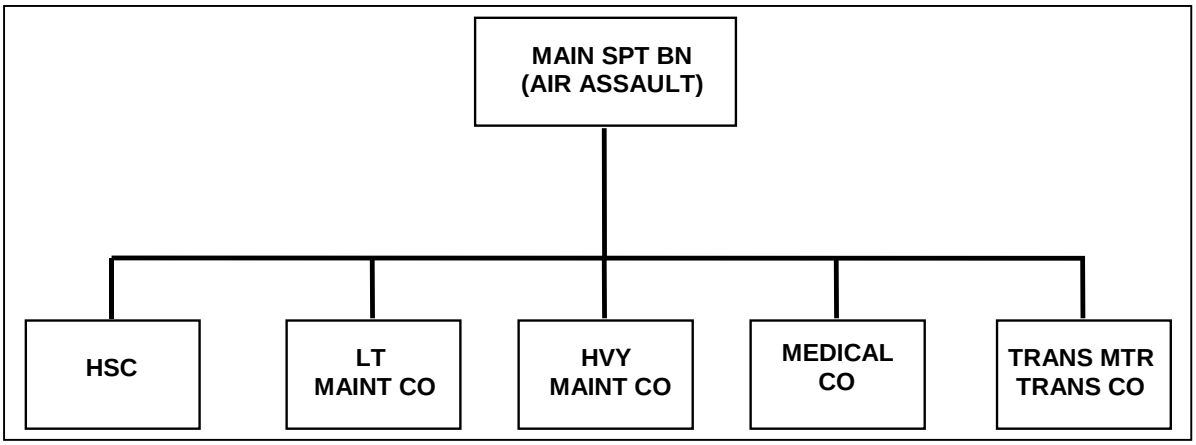

Figure 2-40. Typical Organization, Main Support Battalion (Air Assault Division)

HEAVY MAINTENANCE COMPANY, MAIN SUPPORT BATTALION (AIR ASSAULT DIVISION)

MISSION

2-182. To provide DS-level maintenance and repair parts supply support to units deployed in the division support area. This unit also provides reinforcing maintenance for the three FSB forward maintenance companies.

CAPABILITIES

2-183. This unit provides—

- Backup and reinforcing maintenance support to the three forward maintenance companies, except repair parts.
- Limited backup recovery assistance to supported units.

Individuals of this organization can assist in a coordinated defense of the unit's area or installation. This unit is capable of performing unit maintenance on organic equipment, except communications-electronics.

2-184. This unit is dependent on—

- Appropriate elements of the division or corps for combat health support, legal, finance, and personnel/administrative services.
- Headquarters and supply company, TOE 63266L000, for food service support.

BASIS OF ALLOCATION

2-185. One per main support battalion, air assault division, TOE 63225L000. Figure 2-41 shows the organization of a heavy maintenance company, MSB (air assault division).

MOBILITY

2-186. This unit is—

- Capable of transporting 194,100 pounds (10,877 cubic feet) of TOE equipment with organic vehicles.
- Requires that 50 percent of its TOE equipment and supplies be transported in a single lift using its authorized organic vehicles.

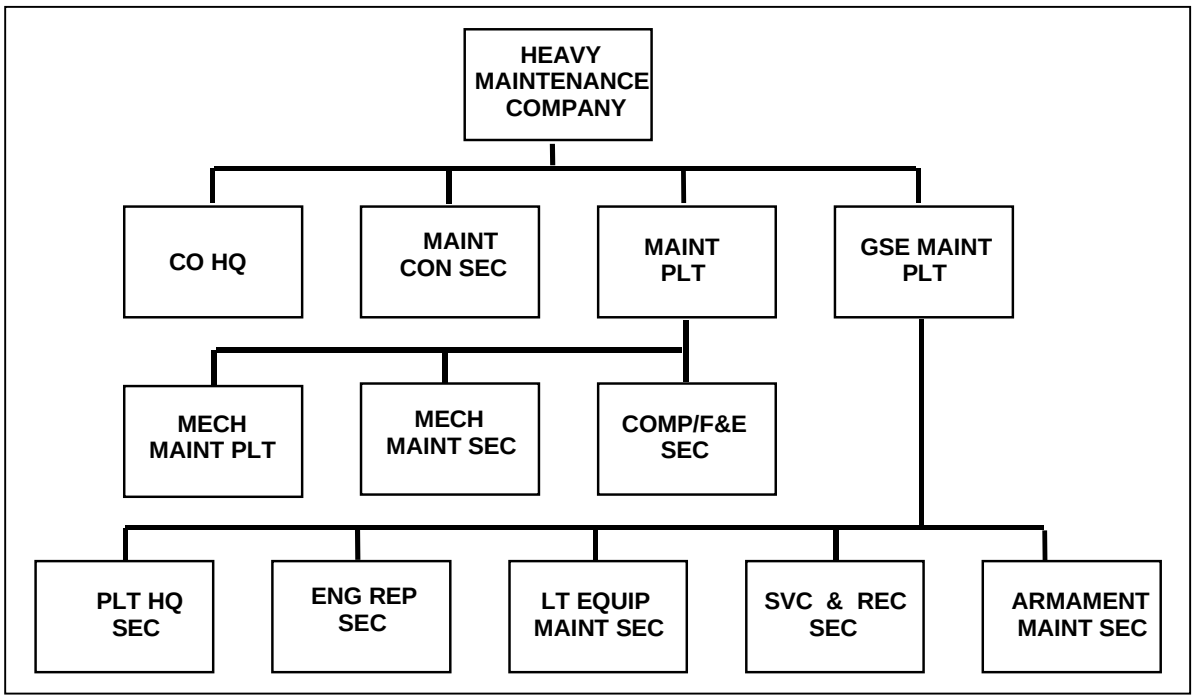

Figure 2-41. Typical Organization, Heavy Maintenance Company, MSB (Air Assault Division)

LIGHT MAINTENANCE COMPANY, MAIN SUPPORT BATTALION (AIR ASSAULT DIVISION)

MISSION

2-187. The unit provides—

- DS-level maintenance and common/missile repair parts supply support to units deployed in the division support area.
- Reinforcing maintenance for the three FSB forward maintenance companies.

CAPABILITIES

2-188. The light maintenance company, MSB (air assault division) provides—

- DS-level maintenance on all authorized missile equipment, electronic and COMSEC equipment, and standard 'A' adopted items of ADP equipment to units in an air assault division.
- Passback and backup support to the three FSB forward maintenance companies.

- Technical assistance for missile, electronic, COMSEC, and ADP equipment to divisional units.
- Common and missile repair parts supply to elements of the three FSB forward maintenance companies.
- RX service for selected items (common/missile).

Individuals of this organization can assist in a coordinated defense of the unit's area or installation. This unit is capable of performing unit maintenance on organic equipment.

2-189. This unit is dependent on—

- Appropriate elements of the division or corps for combat health support, religious, finance, and personnel/administrative services.
- Headquarters and supply company, TOE 63266L000, for food service support.

BASIS OF ALLOCATION

2-190. One per main support battalion, air assault division, TOE 67000L000. Figure 2-42 shows the organization of a light maintenance company, MSB (air assault division).

MOBILITY

2-191. This unit is 50 percent mobile.

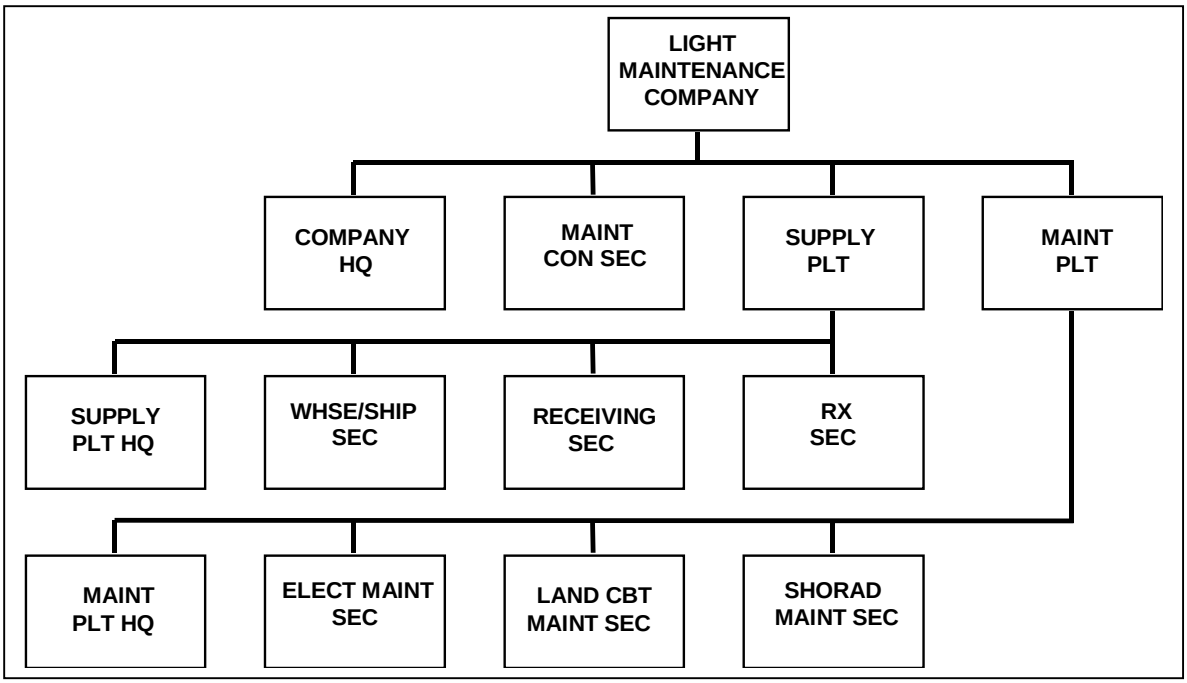

Figure 2-42. Typical Organization, Light Maintenance Company, MSB (Air Assault Division)

FORWARD SUPPORT BATTALION (AIR ASSAULT DIVISION)

MISSION

2-192. The DISCOM has three FSBs, one for each division maneuver brigade, to provide DS-level support to all division units in the brigade sectors.

NOTE

The air assault division FSB also has an HSC separate from the companies in the battalion. Unlike the MSB, the FSB has no transportation support capability in its structure. Nor does it have field service capability in its supply company. All of the FSB's maintenance capabilities are consolidated in one maintenance company.

UNITS

2-193. The air assault division FSB consists of—

- Headquarters and supply company.
- Maintenance company.
- Medical company.

Figure 2-43 shows the organization of an air assault division FSB.

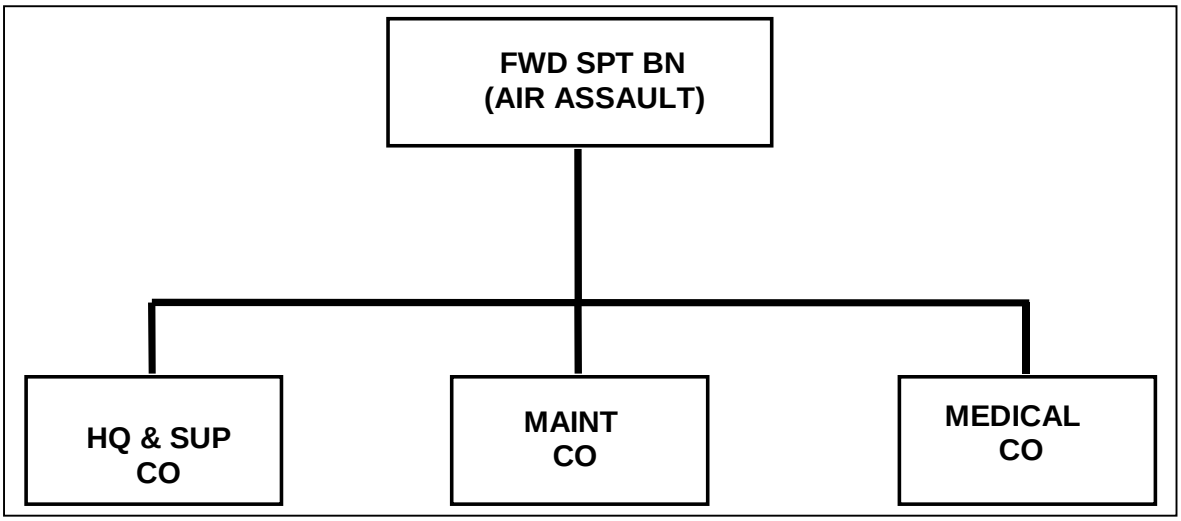

Figure 2-43. Typical Organization, Forward Support Battalion (Air Assault Division)

MAINTENANCE COMPANY, FORWARD SUPPORT BATTALION (AIR ASSAULT DIVISION)

MISSION

2-194. To provide DS-level maintenance and repair parts supply support to a maneuver brigade in an air assault division.

CAPABILITIES

2-195. This unit provides—

- DS-level maintenance to supported units.
- ASL for a 480-line ASL; RX service for 12 lines.
- Technical assistance to units in the brigade.

Individuals in this organization can assist in a coordinated defense of the unit's area or installation.

2-196. This unit is dependent on—

- Appropriate elements of the division or corps for combat health support, religious, legal, finance, and personnel/administrative services.
- Headquarters and supply company, FSB, TOE 63256L000, for food service and unit maintenance.
- Assault helicopter company, TOE 01147L000, for transportation of critical Class IX repair parts and major assemblies.
- HHC/MMC, TOE 63252L000, for centralized Class IX management and automated materiel management.
- TMT company, TOE 55158L000, for transportation of Class IX supplies from division support area to brigade support area.

BASIS OF ALLOCATION

2-197. One per forward support battalion, air assault division. Figure 2-44 shows the organization of a maintenance company, FSB (air assault division).

MOBILITY

2-198. This unit is—

- Capable of transporting 93,000 pounds (8,150 cubic feet) of TOE equipment with organic vehicles.
- Has 106,800 pounds (15,200 cubic feet) of equipment requiring additional transportation.

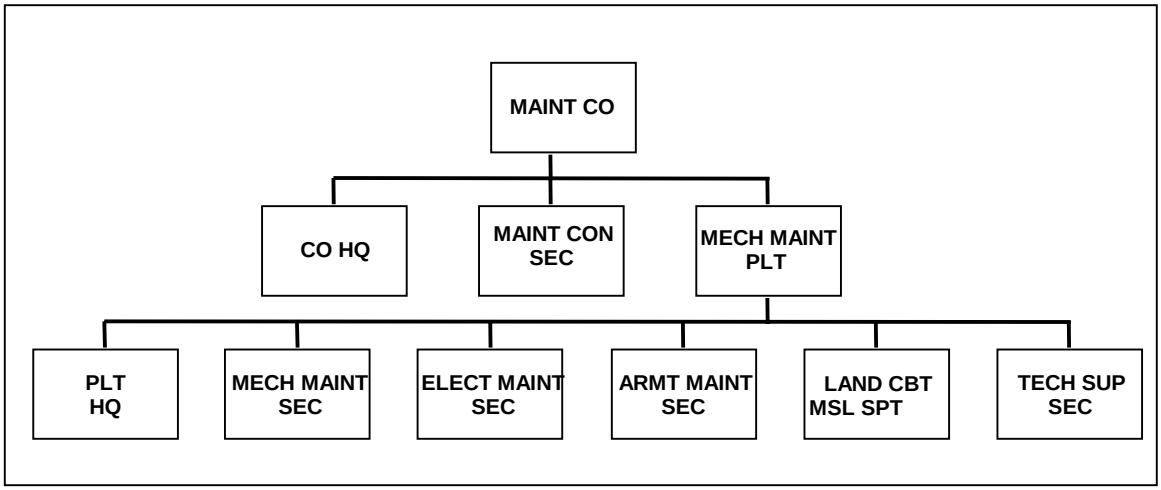

Figure 2-44. Typical Maintenance Company, FSB (Air Assault Division)

SECTION IV – COVERING FORCE SUPPORT AREA

2-199. Section IV describes the organizations in the covering force area. The ACR and separate infantry brigade (SIB) are found in the covering force area. The ACR and SIB are brigade-size combat maneuver elements that are not part of a division force structure. They are normally assigned to a corps, where they perform missions like covering force operations (forward of the divisions) or screening operations. Figure 2-45 shows the organization of an armored cavalry regiment and a separate infantry brigade.

NOTE

The ACR and SIB differ structurally from divisional brigades in that they have various combat and combat support units (air defense artillery (ADA), MI, field artillery (FA), engineer company) organic to them. In a division, these combat and combat support units operate with the brigades but are not organic to them.

SUPPORT SQUADRON, ARMORED CAVALRY REGIMENT

MISSION

2-200. The support squadron provides DS-level maintenance, supply, transportation, and combat health support to the ACR and its attached units. When augmented, field services are also provided. The squadron has a data center and MMC in the squadron headquarters.

BASIS OF ALLOCATION

2-201. One per ACR. Figure 2-46 shows the organization of a support squadron, ACR.

UNITS

2-202. The support squadron, ACR consists of—

- Headquarters and headquarters troop.
- Supply and transportation troop.
- Maintenance troop.
- Medical troop.

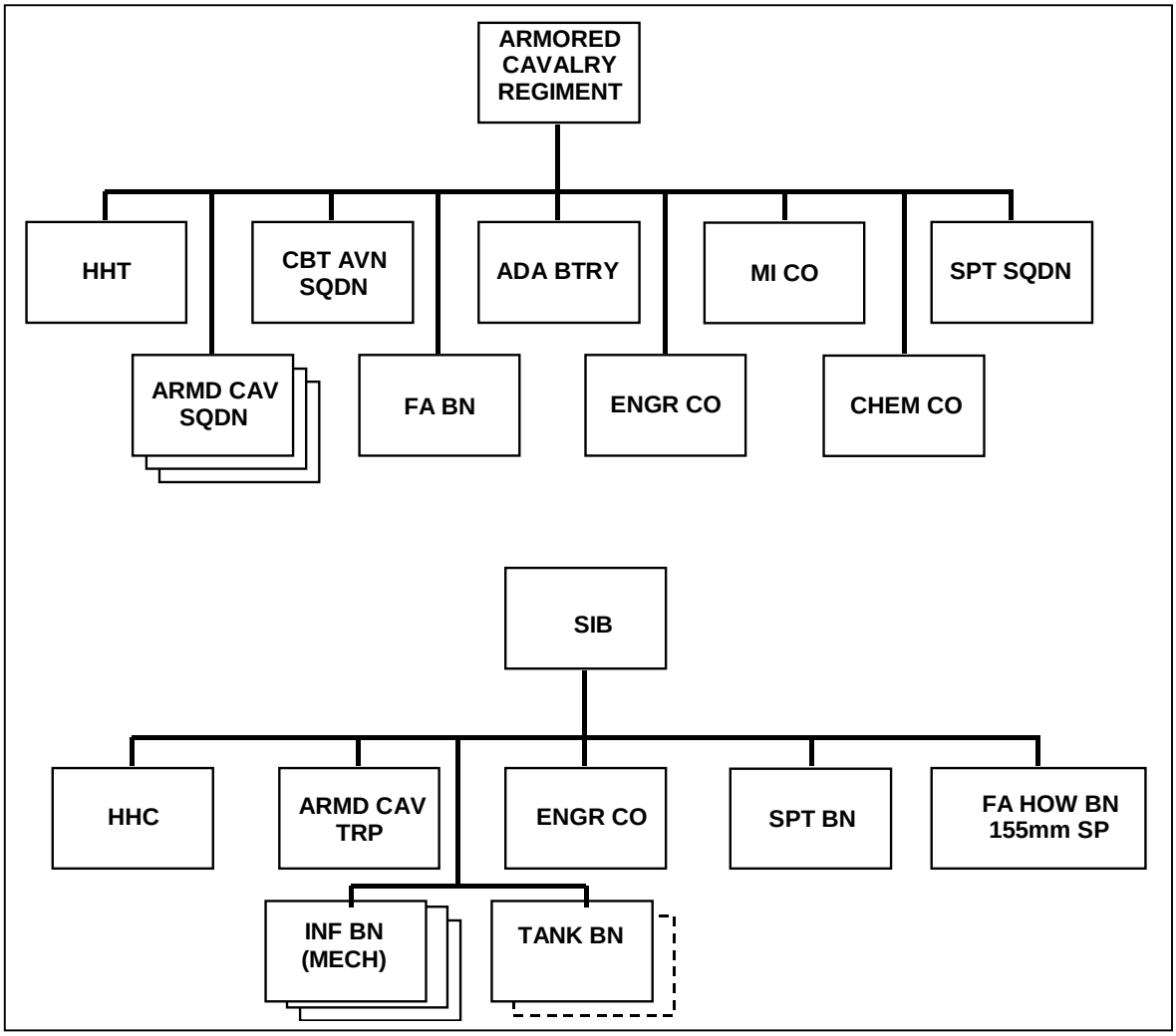

Figure 2-45. Typical Organization, Armored Cavalry Regiment and Separate Infantry Brigade

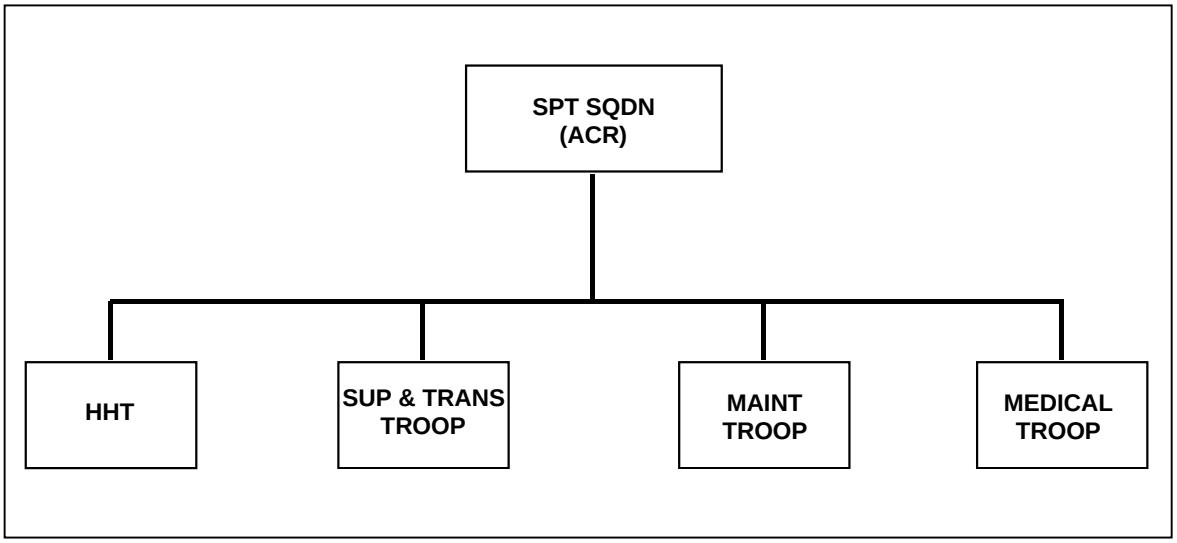

Figure 2-46. Typical Organization, Support Squadron, ACR

MAINTENANCE TROOP, ARMORED CAVALRY REGIMENT

MISSION

2-203. To provide DS-level maintenance and repair parts supply support to the ACR.

CAPABILITIES

2-204. This unit provides DS-level maintenance for—

- Power generation and engineer equipment.
- Quartermaster and chemical equipment.
- Utilities equipment.
- Communications equipment.
- Special electronic devices.
- Radar equipment.
- TACFIRE.
- Office machines.
- COMSEC equipment.
- Artillery equipment.
- Automotive equipment.
- Metalworking.
- Small arms and tank turret.

This unit also provides limited recovery to supported units. It maintains—

- ASL up to 3000 lines.
- Operational readiness float for the ACR.

This unit is dependent on—

- Appropriate elements of the regiment or corps for combat health support and religious, legal, finance, and personnel and administrative services.

- TOE 63456L000, headquarters and headquarters troop, support squadron, for food service support, unit administration, and centralized materiel management for Class IX.
- Appropriate assets from TOE 42457L000, supply and transportation troop, for supplemental transportation.

BASIS OF ALLOCATION

2-205. One per support squadron. Figure 2-47 shows the organization of a maintenance troop, support squadron, ACR.

MOBILITY

2-206. This unit is 100 percent mobile.

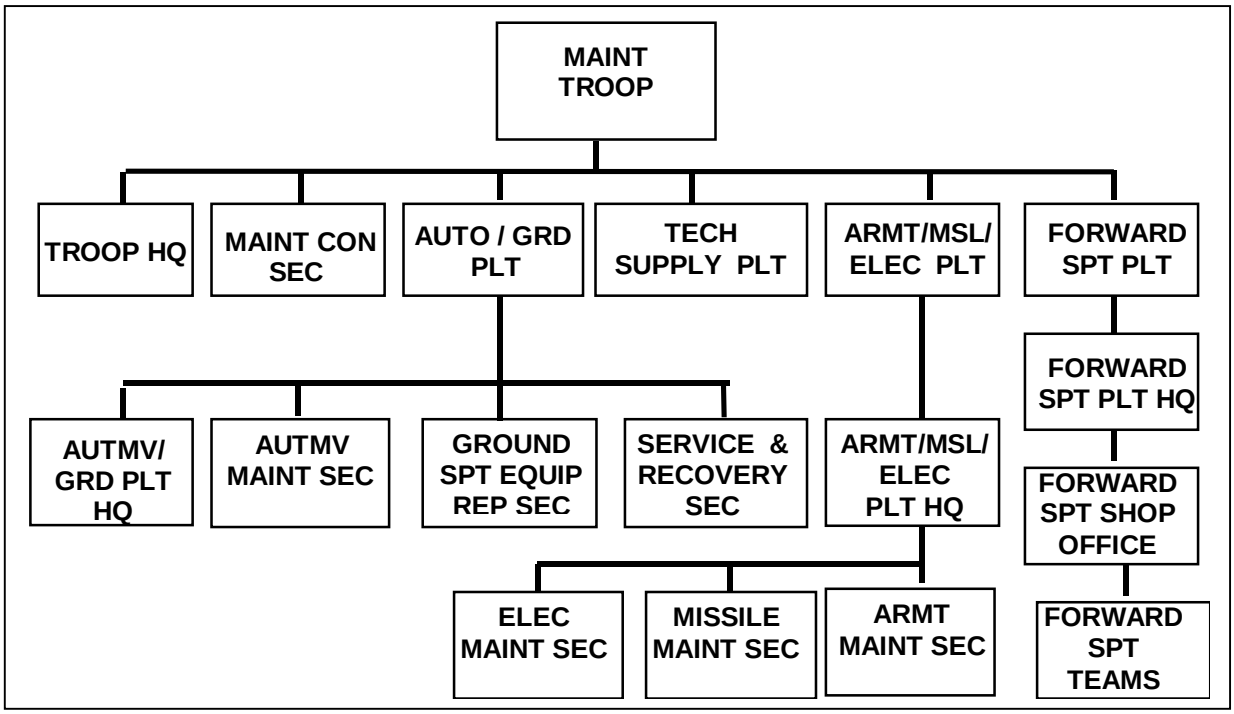

Figure 2-47. Typical Organization, Maintenance Troop, Support Squadron, ACR

SUPPORT BATTALION, SEPARATE INFANTRY BRIGADE

MISSION

2-207. The support battalion provides DS-level maintenance, DS supply, transportation, and combat health support to an SIB and its attached units. When augmented, field services are also provided. The battalion has a data center and MMC in the battalion headquarters.

BASIS OF ALLOCATION

2-208. One per separate infantry brigade. Figure 2-48 shows the organization of a support battalion, SIB.

UNITS

2-209. The support battalion, SIB, consists of—

- Headquarters and headquarters company.
- Supply and transportation company.
- Maintenance company.
- Medical company.

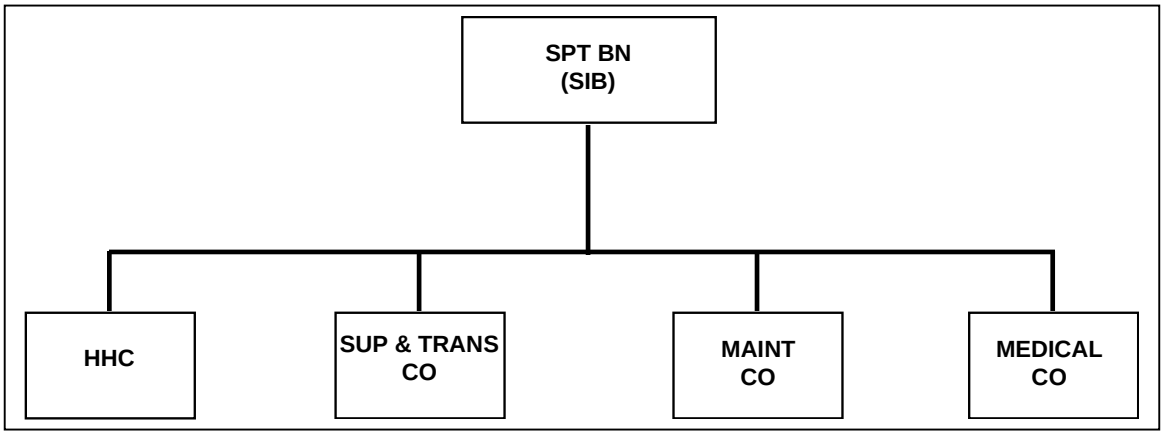

Figure 2-48. Typical Organization, Support Battalion, SIB

MAINTENANCE COMPANY, SEPARATE INFANTRY BRIGADE

MISSION

2-210. To provide DS-level maintenance and repair parts supply support to attached and supporting units of a separate infantry brigade.

CAPABILITIES

2-211. This unit provides DS-level maintenance for—

- Power generation and engineer equipment.
- Quartermaster and chemical equipment.
- Utilities equipment.
- Communications equipment.
- Special electronic devices.
- Radar equipment.
- TACFIRE.
- Office machines.
- COMSEC equipment.
- Artillery equipment.

- Automotive equipment.
- Metalworking.
- Small arms and tank turret.

This unit also provides—

- MST for on-site maintenance of supported unit.
- Limited backup recovery to supported units.
- RX service of selected items.

This unit maintains—

- ASL up to 4200 lines.
- Operational readiness float for the SIB.

The base company may be augmented with SSTs to tailor the support to specific vehicle densities.

This unit is dependent on—

- Appropriate elements of the brigade or corps for combat health support and legal, finance, and personnel and administrative services.
- The brigade materiel management center (BMMC), TOE 63446L000, for centralized materiel/supply management.
- Headquarters and headquarters company, separate infantry brigade, TOE 63446L000, for religious, unit administration, and food service support.
- Medical company, support battalion, separate infantry brigade, TOE 08438L100 for unit-level combat health support.

BASIS OF ALLOCATION

2-212. One per support battalion, SIB. Figure 2-49 shows the organization of a maintenance company, support battalion, SIB.

MOBILITY

2-213. This unit is 100 percent mobile.

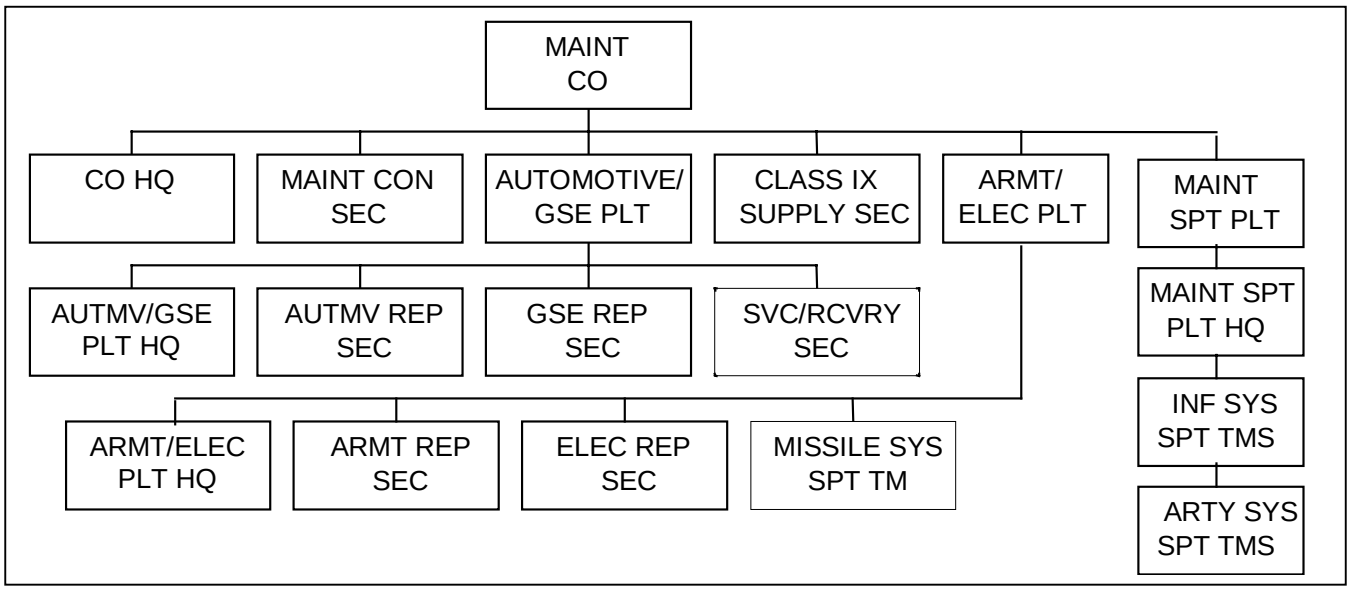

Figure 2-49. Typical Organization, Maintenance Company, Support Battalion, SIB

SECTION V – UNIT MAINTENANCE ORGANIZATION FOR COMBAT UNITS

2-214. Section V describes the unit maintenance organization for combat units. Army units are organized to support their individual missions. To be successful, using units must obtain and maintain the maximum level of combat effectiveness. This is done by using organizational maintenance sections that balance people and equipment and maintenance units that provide more complex DS- and GS-level maintenance.

COMBAT BATTALION ORGANIZATION

2-215. The unit TOE establishes maintenance requirements and resources. Guidance on how to employ those resources is contained in this manual and in manuals pertaining to particular units. In combat units, organizational maintenance personnel are located at the battalion level.

2-216. In armored and mechanized infantry units, CSS assets are assigned to the headquarters and headquarters company. CSS is moved forward to the companies as required. This allows company commanders to concentrate on the combat mission and on performance of operator/crew maintenance tasks.

2-217. A team effort is needed for responsive maintenance support. Keeping equipment operational and repairing it quickly takes the combined effort of many individuals. To function effectively, team members must know each other's responsibilities and capabilities, as well as limitations. Although the following discussion is oriented toward armor and mechanized infantry battalions, most provisions also apply to other units.

2-218. Combat battalions are organized to accomplish their combat mission and to provide unit-level maintenance on assigned equipment. Figure 2-50 shows the organization of an armored/mechanized infantry battalion.

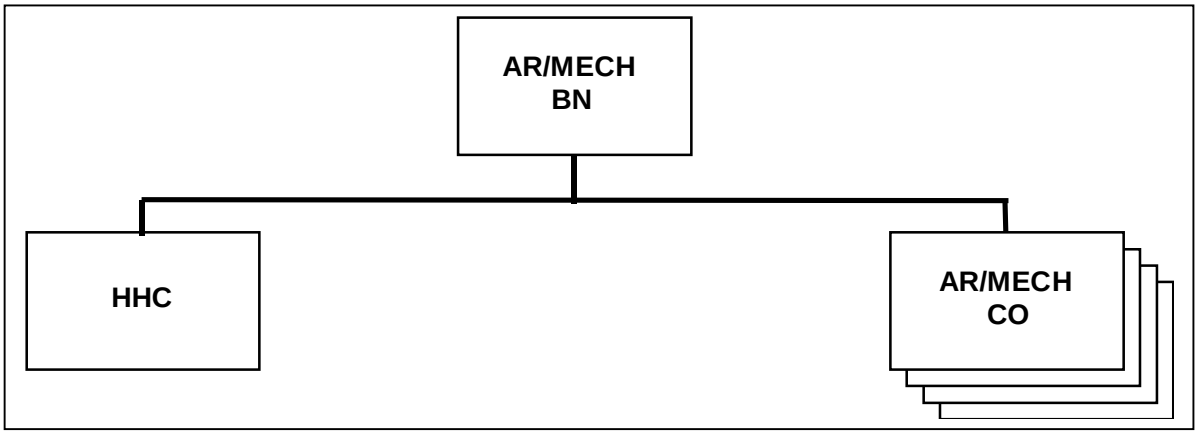

Figure 2-50. Typical Organization, Armored/Mechanized Infantry Battalion

HEADQUARTERS AND HEADQUARTERS COMPANY

2-219. The HHC provides the battalion's command and control, CS, and CSS elements. Figure 2-51 shows the organization of a headquarters and headquarters company, combat battalion.

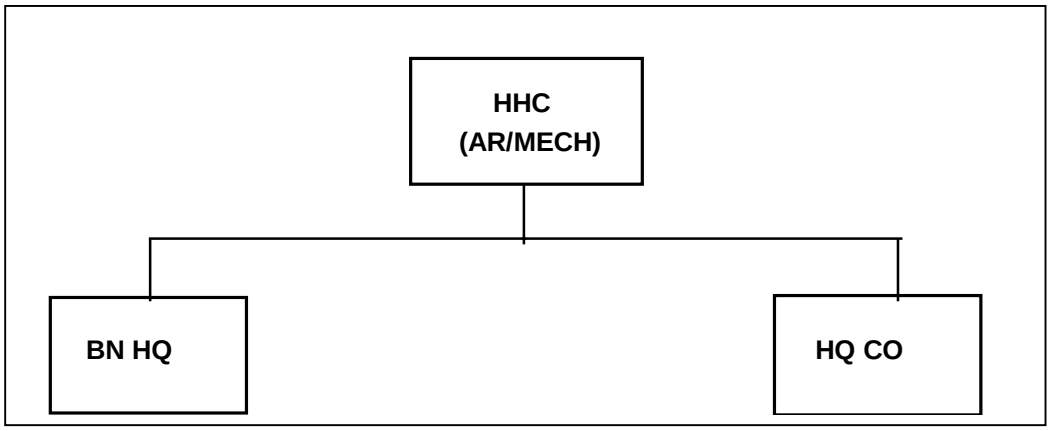

Figure 2-51. Typical Organization, Headquarters and Headquarters Company, Combat Battalion

BATTALION HEADQUARTERS

2-220. The headquarters provides the officers and soldiers to support battalion operations. Key personnel of the command group include: battalion commander, executive officer (XO), and command sergeant major (CSM). The battalion staff consists of the S1, S2, S3, S4, and all special staff officers.

COMPANY HEADQUARTERS

2-221. The company headquarters provides command, control, communications, administration, and logistics support for the company. The company headquarters consists of a company commander, executive officer, first sergeant, and the company supply section. The company commander is responsible for the battalion/task force field trains. The commander establishes the HHC command post, coordinates support with the FSB, and serves as the battalion task force rear operations officer. Figure 2-52 shows the organization of a company headquarters.

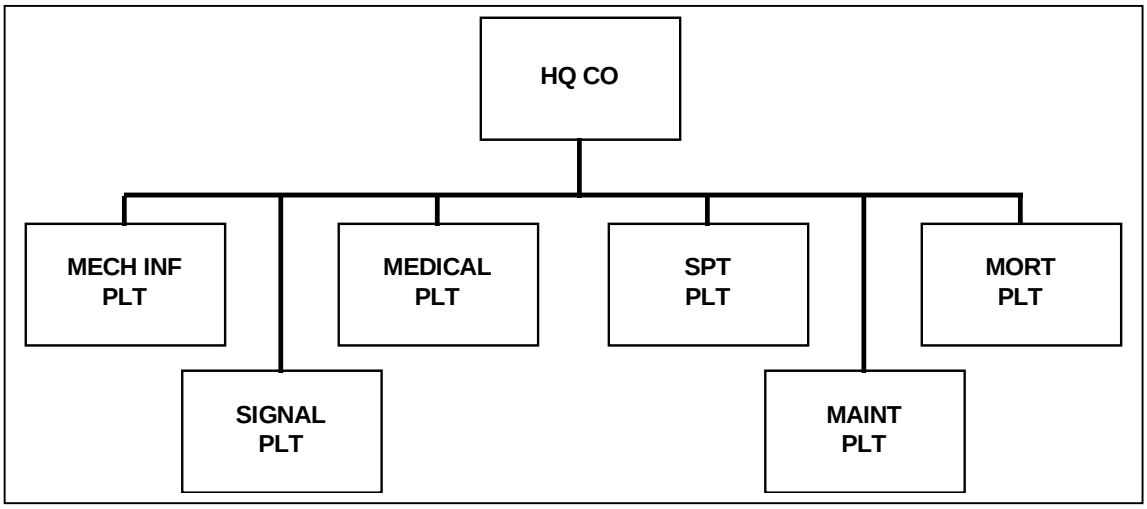

Figure 2-52. Typical Organization, Company Headquarters

2-222.. In a tank company, both the commander and the XO are mounted in tanks, and the XO is required forward in the battle area. This makes the first sergeant the key person for maintenance support coordination.

2-223. In a mechanized infantry company, both the XO and first sergeant are mounted in wheeled vehicles, and the support coordination task may be shared to a larger degree. A unit armorer provides unit maintenance for assigned small arms. Unit maintenance for NBC defense equipment is provided by equipment users.

MAINTENANCE PLATOON

2-224. The maintenance platoon consists of the headquarters, the maintenance administrative, recovery support, and maintenance service sections, and the CMTs. The platoon operates from the UMCP, field trains, and company/team combat trains. It is responsible for maintaining the battalion's PLL and TAMMS automated maintenance records. Figure 2-53 shows the typical organization of an armored/mechanized infantry battalion maintenance platoon of the HHC.

2-225. The platoon provides company maintenance teams to support the battalion/task force maintenance mission. In addition, the platoon interfaces with the FSB and the DS MST. It provides organizational maintenance for battalion/task force equipment. The maintenance service section of the maintenance platoon augments the CMTs as required. CMTs are controlled by the battalion maintenance officer (BMO) when they are employed outside the company/team combat trains area.

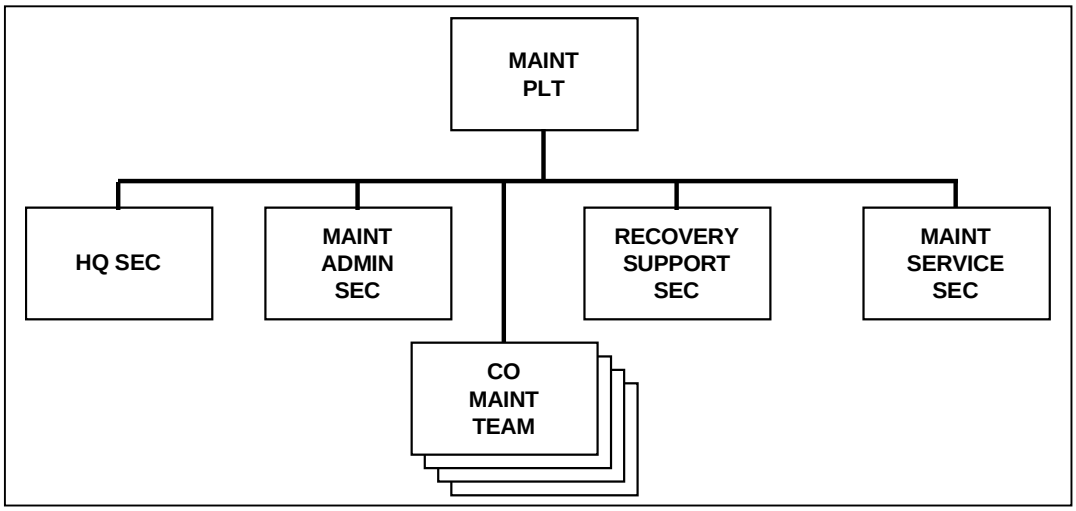

Figure 2-53. Typical Organization, Maintenance Platoon, Armored/Mechanized Infantry Battalion, HHC

HEADQUARTERS SECTION

2-226 The headquarters contains the command and control elements. It consists of a platoon leader (who is also the BMO), a battalion maintenance technician (BMT), and a battalion maintenance sergeant (BMS). This element develops maintenance support plans consistent with the battalion's combat mission. It tailors the platoon to meet mission requirements and directs platoon operations. It focuses the maintenance effort forward to sustain maximum combat power. The headquarters section is responsible for providing maintenance priorities for the DS MST.

MAINTENANCE ADMINISTRATIVE SECTION

2-227. This section maintains repair parts and TAMMS maintenance records automated using ULLS-G. It maintains the collocated PLL for each combat company and is responsible for requisitioning, storing, and issuing repair parts for CMTs and maintenance service teams. On the battlefield, the maintenance administrative section will employ PLLs based on maintenance requirements, the tactical situation, and risk assessment.

2-228. The majority of combat weapon systems are located forward of the combat trains. PLL assets required to support forward weapon systems are located in the UMCP with some specific parts located forward with CMTs. Since this is a high-risk area, a portion of the unit PLL remains in the field trains, with PLL repair parts pushed forward as required. Two or three task force company PLLs may be pushed forward with one or two held for reserve in the rear. PLL assets must be placed on the battlefield based on the tactical situation. Due to frequent movement, it is essential that units operate with a combat PLL.

MAINTENANCE SERVICE SECTION

2-229. The maintenance service section provides combat flexibility in placing maintenance assets on the battlefield at the place and time where needed most. It supports mission priorities established by the battalion leadership. This section is organized into teams with transportation capabilities for mobility on the battlefield.

2-230. During combat, this section's first priority is to reinforce the company maintenance teams in their mission of returning equipment requiring minimum repair (the task force commander establishes time lines for repair at the point of breakdown) to the battle. Teams not forward are located in the UMCP concentrating their efforts toward repairing weapon systems for the current battle or the start of the next battle.

2-231. The FSB MST assists the maintenance service section in its maintenance efforts in the UMCP. Systems requiring additional maintenance are recovered to and repaired in the UMCP. (The task force commander establishes time lines for repair at UMCP.) They are critical to the combat mission. These repairs are made by CMTs and the FSB MST. The maintenance service section provides a CMT in the field trains. It supports vehicles of the headquarters company support platoon and rear elements.

RECOVERY SUPPORT SECTION

2-232. The recovery support section provides the battalion with the flexibility of placing recovery assets on the battlefield where they can best support battalion mission requirements. This section places its combat vehicle recovery assets forward. The BMO shifts assets based on the maintenance and recovery workload.

2-233. Recovery vehicles are used to reinforce the CMTs' recovery capability. They recover equipment from the battlefield (point of breakdown), recover equipment from the company area to the UMCP or designated heavy equipment transport points, and assist in moving the UMCP.

COMPANY MAINTENANCE TEAM

2-234. CMTs are organized and equipped to provide mobile organizational maintenance support to the combat companies. CMTs perform BDAR, diagnose maintenance problems, and conduct organizational repairs and recovery. When required, they deploy with the PLL associated with their company. They establish a close working relationship with the supported company.

2-235. The BMO provides the company with a CMT based on the battalion/task force maintenance priorities. The team's focus is on completing those repair jobs that quickly increase the combat power of a unit. It normally deploys with RX components and high-usage repair parts. IAW established guidance, it reports equipment requiring more extensive repairs to the BMT. This equipment is recovered to the UMCP for repair by maintenance personnel of the maintenance service section and the FSB MST.

2-236. The CMT recovery vehicle remains in the forward area where it is used to return vehicles to the battle. The recovery vehicle crew performs BDAR and pulls vehicles out of the line of fire for further repair. Vehicles requiring repair in the UMCP are recovered to a collection point in the forward area. Recovery teams from the recovery support section move the weapon systems to the UMCP.

FORCE XXI AND BEYOND…

Under the Force XXI principle, Single Logistics Operator, organizational combat service support functions traditionally provided by the maneuver battalion HHC and DS-level CSS provided by the forward support battalion have now been consolidated in the Force XXI Forward Support Company (FSC). The FSC is a multifunctional unit that provides organizational and DS-level maintenance, supply, and distribution functions to the maneuver battalion.

As the FSB is in direct support of the brigade combat team, the FSC is in direct support of a maneuver task force, armor or mechanized infantry. The FSC is modular, which gives it the ability and flexibility to surge assets in order to support the priorities established by the task force commander. In addition, the FSC commander has the ability to tailor support for the task force as the task organization changes. The FSC consists of a company headquarters, a supply and transportation platoon, and a maintenance platoon.

The maintenance platoon provides consolidated organizational and direct support maintenance to the battalion task force. The single point of contact for maintenance in the task force is the maintenance control officer. He is responsible for planning, executing, and managing maintenance operations IAW established priorities. The maintenance control section is responsible for dispatching, scheduling services, workloading maintenance sections, and maintaining the Army maintenance management system automated records using ULLS-G and SAMS-1.

Combat repair teams (CRTs) provide the first line of maintenance support to the armor and infantry companies. The CRT is a modular organization that provides dedicated and habitual support to the same unit both in a garrison and a tactical environment. As the task organization changes, a CRT moves with its supported unit. CRTs are equipped with the Heavy Equipment Recovery Combat Utility Lift and Evacuation System (HERCULES) M88A2 recovery vehicle. The M88A2 provides the CRT the capability to recover an M1A1 Abrams tank using one M88 versus the current requirement of two. The CRT is also outfitted with the Forward Repair System (FRS). This state of the art system provides CRT mechanics with diagnostic systems, tools, and an overhead lift capability necessary to maintain the Army's combat systems. This system is mounted on a PLS chassis and has the ability to keep up with combat operations. In addition, the FRS reduces the requirement for using recovery vehicles for lifting operations.

Added to the CRT capabilities is the Multicapable Maintainer (MCM). The MCMs bring a unique capability to the battlefield. They have the capability to provide both organizational and DS on-system maintenance to the unit they support. The MCM is a system mechanic that provides field-level maintenance support for the Abrams system (63A) or the Bradley fighting vehicle system (63M). A majority of the Multicapable Maintainers are assigned in the CRTs, but MCMs are also found in the maintenance and service section of the FSC and the track teams in the Base Support Company, FSB.

FM 63-20-1, *Forward Support Battalion (Digitized)*, provides an in-depth discussion of Force XXI Forward Support Company maintenance operations.

SECTION VI – ORGANIZATION FOR TASK FORCE SUPPORT

2-237. Section VI describes task force organizations for EAC, corps, and brigade support areas.

ECHELONS ABOVE CORPS AREA LOGISTICS TASK FORCE

2-238. EAC area logistics task forces (TFs) are multifunctional ad hoc organizations tailored from existing ASG assets to provide DS-level maintenance, supply, field services, and transportation support to units located in or passing through their assigned area. Their organization may be relatively permanent or it may be a temporary structure. An area logistics task force may be organized to support specific missions or contingency missions where the entire force structure of an ASG is not required.

NOTE

If organized permanently, the number of EAC area logistics task forces within the ASG depends on the types and density of supported units, the geographical area, and the supported units' specific requirements.

2-239. The EAC area logistics task force provides a single point of contact for units needing a variety of logistical DS support. The DS maintenance company assigned to the area logistics task force is the same base company as described earlier along with augmentation MSTs that support the peculiar needs of units in the COMMZ. DS maintenance units in the ASG may also provide DS-level maintenance backup support to DS maintenance units in the corps.

2-240. Figure 2-54 shows the organization of a typical EAC area logistics task force created by commanders as an ad hoc multifunctional unit tailored to provide DS support in an area of responsibility (AOR) in the COMMZ. When entire companies are not necessary, slices of the companies may be task-organized.

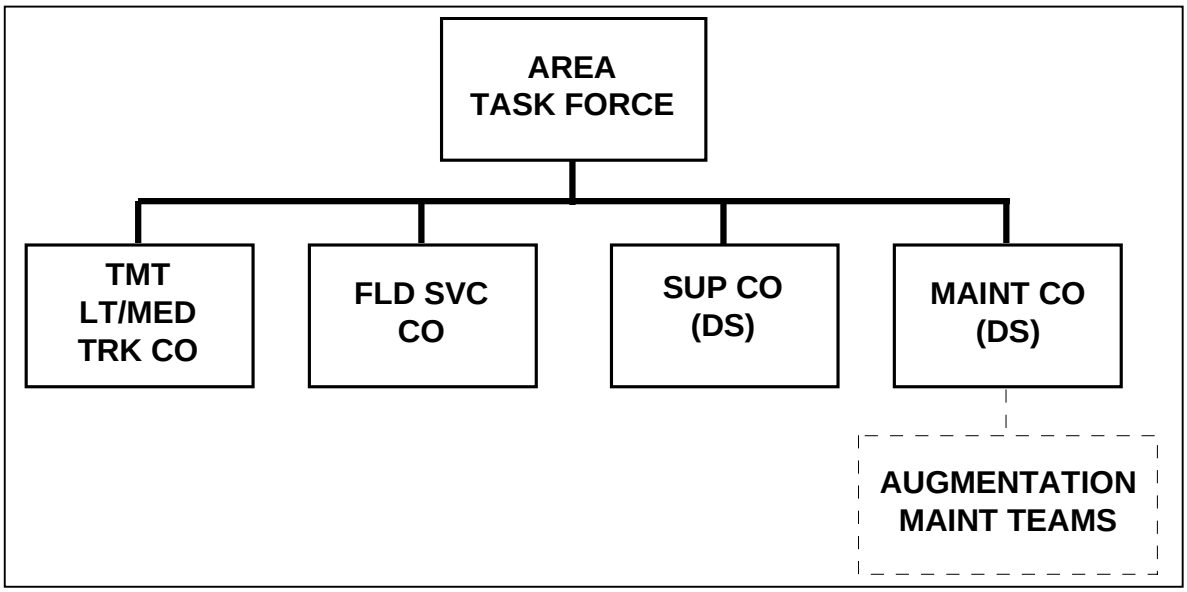

Figure 2-54. Typical Organization, EAC Area Logistics Task Force

CORPS AREA LOGISTICS TASK FORCE

2-241. Each CSG may tailor ad hoc multifunctional organizations to provide DS-level CSS. Forward CSG area logistics task forces are designed to support corps CS and CSS units that typically operate in the division and brigade areas. These organizations provide a single point of contact in the division rear area for CSS. Thus, area logistic TFs provide more responsive DS CSS to the many corps elements operating in forward areas. These units may also provide backup DS to divisional units. The rear CSG may also tailor logistics TFs for operations in the corps rear area. The focus is again on responsive DS CSS.

NOTE

As with the ASG area task forces, the corps area logistics task force may be a temporary or permanent arrangement of CSS units or slices of units; however, even if permanent, units may be attached or detached as missions dictate.

2-242. Following are missions to which corps area logistics TFs are particularly suited:

- Contingency operations where positive command and control of early deploying corps CSS units is essential. These operations may not always require the entire CSG and its full complement of battalion headquarters.
- Reconstitution operations where multiple CSS activities must be closely coordinated and monitored.
- Out-of-sector support missions where synchronization of the mission under a single headquarters is critical.

- Maintenance management above the DS maintenance company. The CSG support operations office supervises the area logistics TF and makes decisions regarding supply and maintenance status to ensure that customer units are properly supported and workloads are equitably distributed. The command adjusts resources to meet the demands by tailoring or task-organizing as necessary.

2-243. Figure 2-55 shows the organization of a typical corps area logistics task force created by commanders as an ad hoc multifunctional unit tailored to provide DS support in an AOR in the division or corps rear areas. When entire companies are not necessary, slices of companies may be task-organized.

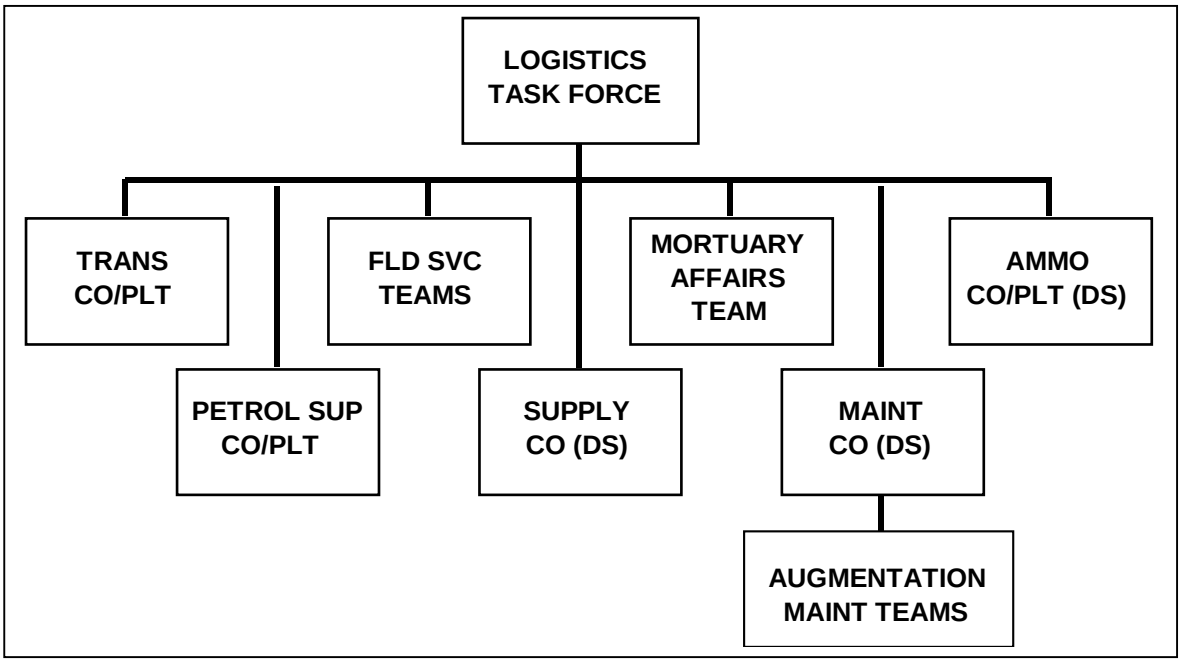

Figure 2-55. Typical Organization, Corps Area Logistics Task Force

BATTALION TASK FORCE ORGANIZATION

2-244. A battalion TF is formed at the direction of the brigade commander. He will determine the combat, combat support, and CSS elements required to accomplish the mission. CSS units face a significant challenge. They must sustain the TF's combat power. Maintenance is performed as far forward as the tactical situation permits to minimize the time it takes to return equipment to combat.

2-245. Battalions are normally task-organized to fight as TFs in heavy divisions. The battalion TF is composed of its organic headquarters and headquarters company; it includes one or more organic companies plus one or more tank or mechanized companies, with CS and CSS assets attached as necessary to accomplish the mission.

2-246. Figure 2-56 shows the organization of a mechanized heavy battalion task force. Figure 2-57 shows the organization of a tank heavy battalion task force. Figure 2-58 shows the organization of a balanced (mechanized) battalion task force. Figure 2-59 shows the organization of a balanced (tank) battalion task force.

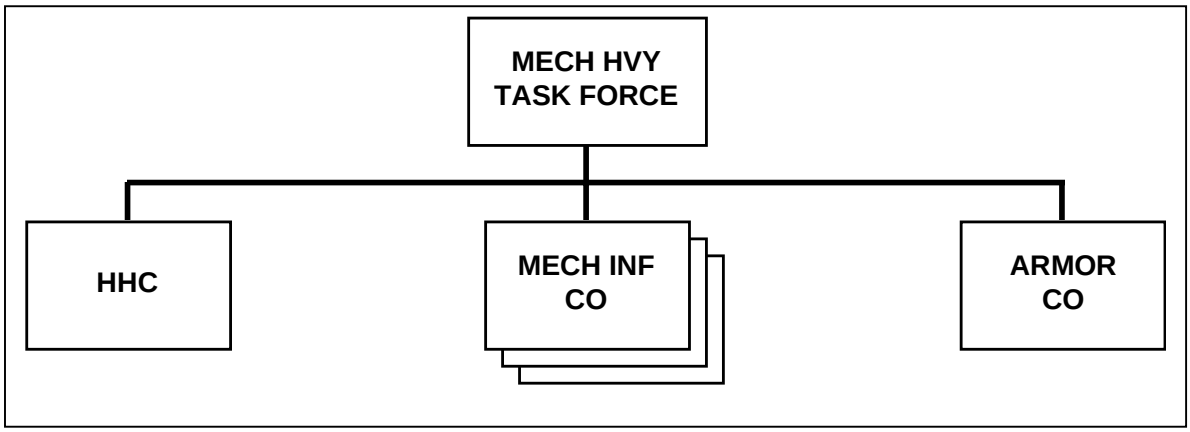

Figure 2-56. Typical Organization, Mechanized Heavy Battalion Task Force

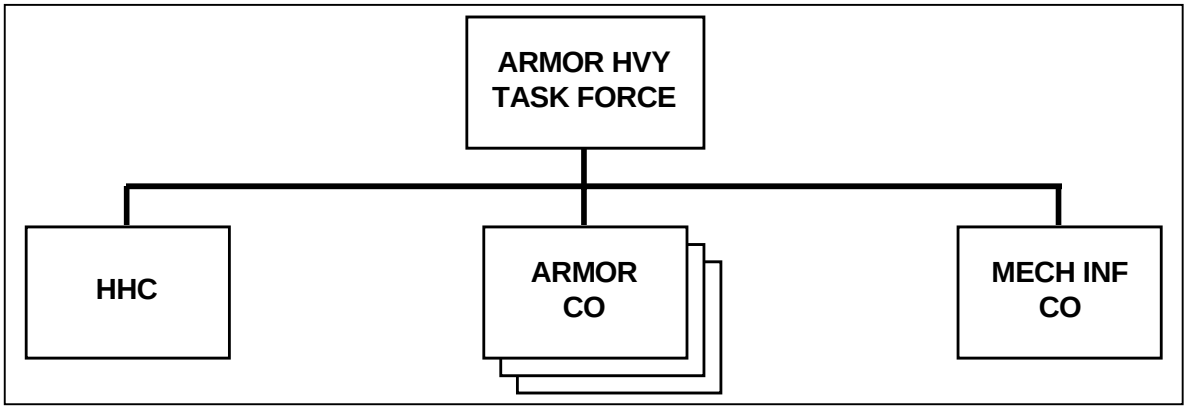

Figure 2-57. Typical Organization, Tank Heavy Battalion Task Force

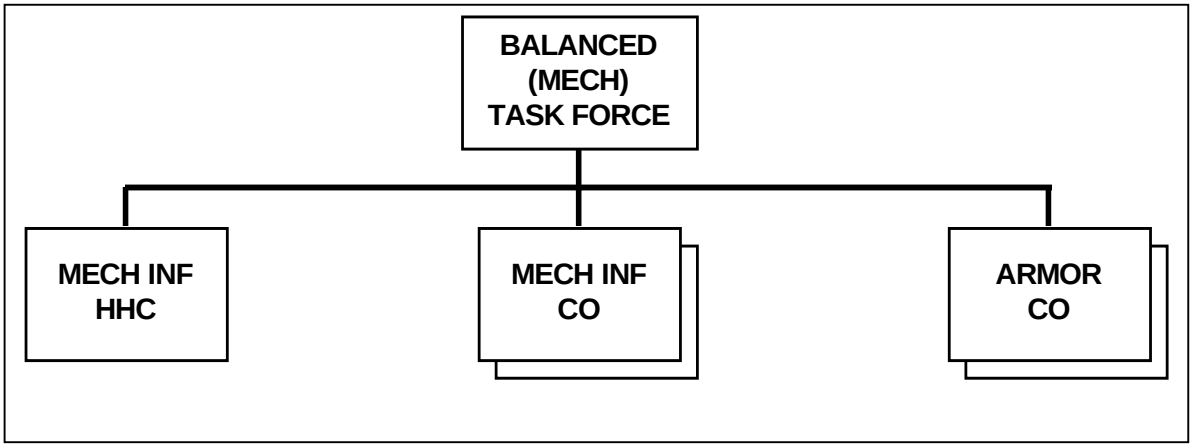

Figure 2-58. Typical Organization, Balanced (Mechanized) Battalion Task Force

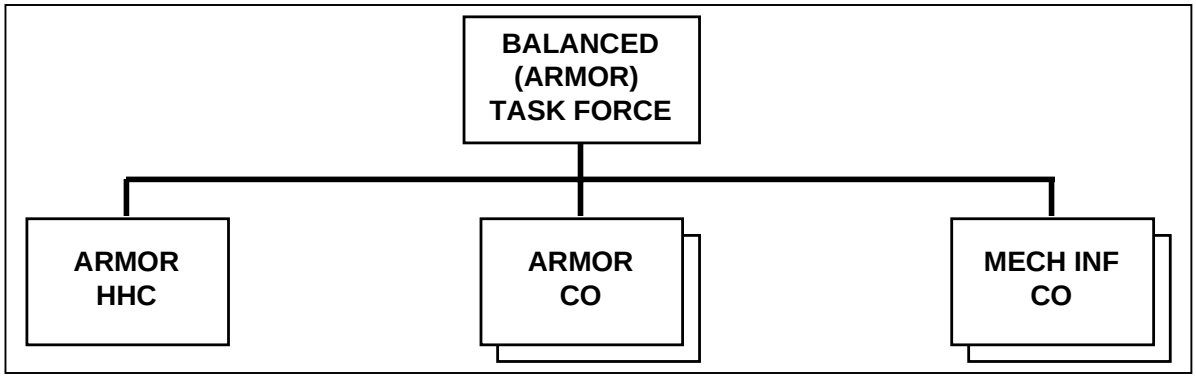

Figure 2-59. Typical Organization, Balanced (Tank) Battalion Task Force

NOTE

Companies detached from their organic battalion must take a slice of their parent battalion's CSS assets to the gaining TF. At a minimum, the slice includes maintenance, supply, and medical personnel and equipment.

UNIT MAINTENANCE ORGANIZATION FOR TASK FORCE SUPPORT

2-247. The maintenance platoon contains the battalion's organizational maintenance and recovery resources. Figure 2-60 shows the maintenance organization in support of a balanced battalion TF.

2-248. Maintenance is task-organized by the BMO to support tactical units. The BMO organizes the platoon into maintenance teams and positions and operates the UMCP. The UMCP is generally located near or with the battalion combat trains. METT-TC will determine what maintenance capabilities are located at the UMCP. Most often the UMCP will include the company maintenance teams (CMTs), the DS maintenance support team, a slice from the battalion maintenance platoon, and limited PLL and RX items.

2-249. TF priorities determine how a company will receive CSS. A CMT is a maintenance team tailored to support one company and sent forward; it is controlled by the BMO. When employed in the company area, the company first sergeant controls the CMT. Additional personnel and equipment from the maintenance platoon may augment the CMT. The BMO may divert the CMT from one company to support another element.

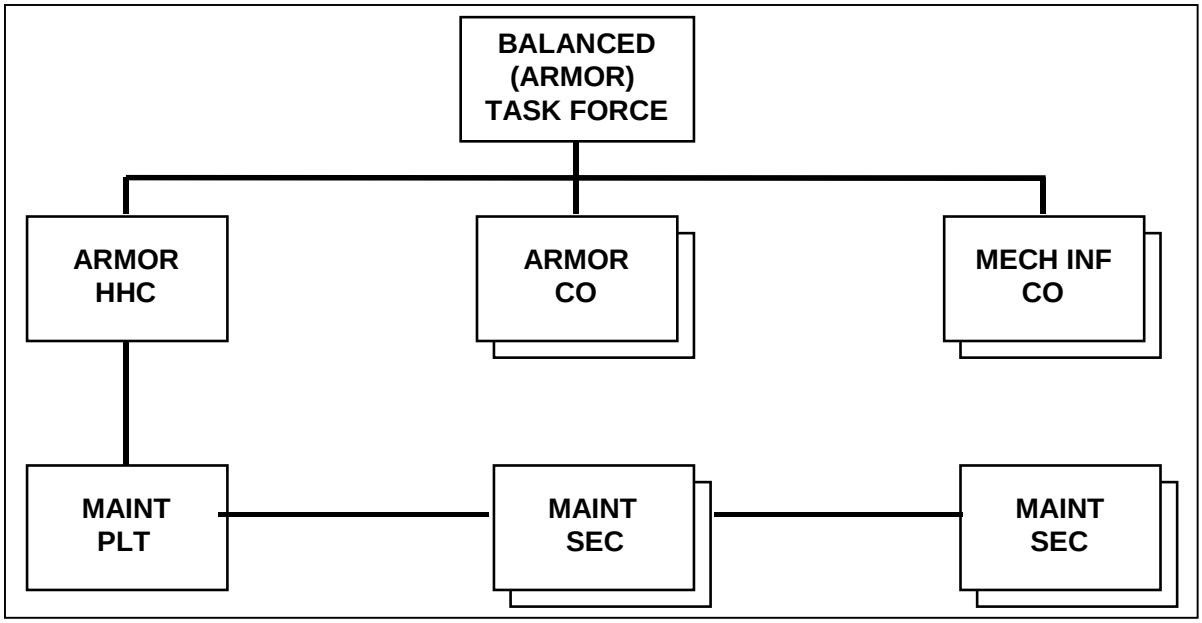

Figure 2-60. Typical Organization, Balanced (Armor) Task Force

SECTION VII – MODULARITY

2-250. Section VII describes the modularity concept and ways to achieve modularity. To enhance their ability to tailor CSS forces, force developers will pursue opportunities to develop modular CSS elements.

DEFINITION AND FUNCTIONS

2-251. Modularity is a force design methodology. It establishes a means of providing force elements that are interchangeable, expandable, and tailorable to meet the changing needs of the Army.

2-252. Modularity provides the tailored functions and capabilities needed by force projection forces across the range of military operations. Modularity provides the methodology for the Army to achieve a force structure that optimizes rapid assembly of mission-oriented contingency forces that are effective and efficient. Modularity provides a means of rapidly identifying, mobilizing, and deploying doctrinally sound, sustainable, and fully mission-capable elements and organizations capable of operating in a joint and combined environment.

2-253. To achieve modularity, the Army needs to examine the processes of determining current deployment requirements. For example, functions not likely to be needed in smaller contingencies or in early phases of a major contingency can be planned for later deployment. Requirements generated by multiple echelons may be eliminated, e.g., eliminate echelon-induced duplicate or redundant requirements; combine requirements for the same unit developed at multiple echelons.

TENETS

2-254. Modularity allows units to be—

- Responsive.
- Economical.
- Effective.
- Flexible.
- Selective.
- Identifiable.

RESPONSIVE

2-255. Modularity provides functions and capabilities to meet a commander's requirements with an initial element. It allows ease of identification and deployment of specific functions on short notice. Modularity permits appropriate force tailoring of necessary functions in a force projection environment. It provides required functions and capabilities with less strategic lift and with reduced sustainment requirements.

ECONOMICAL

2-256. Modularity allows the Army to meet functional CSS requirements early but with a smaller footprint. It enables the Army to achieve economy of scale by deploying only those functions and capabilities needed for the mission. Needed functions and capabilities will be provided at the appropriate time and place. This is especially crucial when considering limited airlift capabilities.

EFFECTIVE

2-257. Modularity facilitates adaptive force packaging, which is METT-TC-driven. It provides a more flexible means for a commander to perform his/her mission. Ultimately, some form of allocation rules (based on size or workload) may be identified. However, the overarching rule is the commander's need.

FLEXIBLE

2-258. Modularity enables support that is expandable, contractible, and interconnecting of diversified functions and capabilities operating in the same area.

SELECTIVE

2-259. Modularity applies to selected organizations that meet the mission profile criteria, e.g., that are required early in deployment. It should be noted that some organizations are already modular in nature, and some organizations may not need modularity.

IDENTIFIABLE

2-260. TOE documentation must clearly identify subelements, e.g., platoon, section, squad, or team, designed for modularity. This allows rapid identification of minimum Army force package requirements for deployment and effective mission accomplishment. Further identification of units at MTOE level can be made by unit identification code (UIC) or derivative UIC.

MAJOR APPROACHES

2-261. There are many approaches to modularity, but the modularity concept focuses on the two major approaches:

- Functionally emulative increments (FEIs). FEIs consist of increments of an organization constructed to emulate functions and capabilities of the whole organization.
- Modular designed units. Modular organizations consist of modules or elements that replicate, augment, or provide discrete functional capabilities, which allows the unit to operate as an entity in one location or as self-sustaining parts of that entity at a different location.

2-262. The object is to regroup the organization for maximum effectiveness and efficiency as soon as possible, but to allow its separate parts to function effectively where and when needed.

FUNCTIONALLY EMULATIVE INCREMENTS

2-263. Functionally emulative increments are organizations constructed with increments, so that each increment reflects the complete essence (functions) of the organization. The increments are interchangeable, expandable (to all or part of the whole), and tailorable to meet changes in METT-TC.

2-264. FEIs apply primarily to CSS organizations at EAD and EAC. The projection of forces from CONUS or forward presence locations for contingency operations will challenge sustainment operations. FEIs enable CSS commanders to provide more precise functions and capabilities needed in force projection across the entire range of operations.

2-265. FEIs—

- Reflect the organization as a whole.
- Apply normally to specific organizations expected to deploy early before follow-on deployment of the entire organization (or when required by METT-TC for the duration).
- Deploy incrementally without loss of effectiveness. Some scenarios may require minimum capability over a long period (Macedonia); others may require building to full capability to support a theater as it matures (Desert Shield).
- Operate independently. Each increment emulates the functions of its parent organization (with less capability).
- Expand, contract, and connect with other FEIs.
- Merge with other FEIs.

Life support must be planned for FEIs if they deploy to an austere area and are separated from the supported unit. The whole may never require deployment. Follow-on deployment (expansion) will be METT-TC-driven.

MODULAR-DESIGNED ELEMENTS

2-266. Modular-designed elements are organizations constructed with discrete elements of specific capabilities. The elements are specific parts/elements of the organization, which, when combined, create the functional capability of the unit. Each subordinate element does not mirror the functional capability of the entire unit.

2-267. Modular designed elements—

- Apply primarily to selected combat and combat support organizations. They may also apply to selected CSS organizations, e.g., DS maintenance support teams, TOE 43509, may be constructed as modular designed elements or as FEIs.
- Facilitate effective packaging of Army forces for contingency operations by permitting a better mix of both mission and support organizations based on theater and contingency mission requirements.

Support operations require logisticians to carefully think, plan, act, and evaluate the support provided to an operation. Modular-designed CSS capabilities provide mission-essential support to combat, combat support, and CSS organizations.

2-268. Modular designed elements—

- Consist of modules and elements of specific capability.
- Permit TOE subelements to be detached from a parent unit and assigned to a contingency force for an indefinite period.
- Are achieved by splitting an organization into separate elements. For example, a parent module or element may remain in a secure location (permanently or until it, too, displaces forward) while a force projection module or element deploys independently of the parent.

2-269. Modular designed elements may be created as teams to provide augmentation to units requiring special capabilities for specific missions. Modular designed elements will permit projection of specific modules and elements of capability that meet the minimum needs of a commander in contingency operations, with additional modules and elements provided as events require.

OTHER APPROACHES

2-270. Other redesigns fall into the following categories:

- Nested modules. These modules can be formed and combined in multiples of the basic module, e.g., squad or section, depending on the requirement.
- Functional modules. In this approach, each module performs a separate function.
- Forward modules. In this approach, selected functions are formed into a forward module. The remainder of the unit must deploy to sustain continuous operations.

DEPLOYMENT

METT-TC

2-271. The commander's analysis of METT-TC determines required functions and capabilities. This will drive which functions and capabilities are deployed.

STRATEGIC LIFT

2-272. Modularity optimizes the use of strategic lift, i.e., smaller, autonomous, but fully capable elements can deploy earlier to establish an infrastructure.

LIFE SUPPORT AND EQUIPMENT MAINTENANCE

2-273. Life support and equipment maintenance may not be organic to deploying increments and elements; planners should therefore consider these requirements when planning deployment.

COMMAND AND CONTROL

2-274. Command and control relationships of organizations must be addressed for deploying increments and elements. Command and control

must be established between organizations within the contingency area as well as with the parent organization, which may be separated by significant distances. Both vertical and horizontal command and control must be established.

INCREMENTS AND ELEMENTS

2-275. Increments and elements that deploy early may be used to support the staging for follow-on forces until the force size requires standard TOE units or additional increments and elements.

STRUCTURE

2-276. Deployment of a modular structure must not render the parent unit incapable of providing proportional mission capability for other operations. Required equipment will be provided for deploying increments and elements as well as for the parent command.

AUTOMATION AND COMMUNICATIONS

2-277. Automation and communications support must continue without interruption for both nondeploying and deploying increments and elements.

MOBILITY

2-278. Mobility must be maintained for increments and elements during force projection operations. Modularity requires increased levels of mobility to move from one location to another as the tasks and missions change.

SECTION VIII – PERSONNEL RESPONSIBILITIES

2-279. Section VIII discusses the logistic responsibilities of battalion headquarters staff personnel and company-level personnel.

BATTALION HEADQUARTERS STAFF

2-280. The headquarters supports battalion operations. Key command group personnel are the commander, XO, support operations officer (SOO), and CSM. The battalion staff consists of the S1, S2, S3, S4, and all special staff officers. Primary maintenance responsibilities are summarized below.

BATTALION COMMANDER

2-281. The battalion commander establishes and enforces maintenance standards. He/she prioritizes and allocates resources, provides training guidance, and is responsible for executing the maintenance mission and materiel readiness.

BATTALION EXECUTIVE OFFICER

2-282. The battalion/task force XO is the principal staff coordinator of logistical support (internal to the battalion). He coordinates all staff actions relating to maintenance and provides overall staff supervision of battalion maintenance. He also provides staff supervision over the S1, personnel services, the S4, all classes of supply, and transportation.

SUPPORT OPERATIONS OFFICER

2-283. The SOO provides technical supervision of CSS functions. The maintenance officer in the support operations office plans, coordinates, and provides technical supervision of DS-level functions performed by maintenance companies. This officer interfaces with brigade and battalion S4s and with BMOs to establish maintenance priorities and resolve maintenance support issues.

BATTALION COMMAND SERGEANT MAJOR

2-284. The CSM is the senior NCO in the battalion/task force. He/she advises the battalion/task force commander on matters relating to training of maintenance personnel. The CSM assists the CSS staff with logistics operations and is the CSS troubleshooter. He/she advises the commander on enlisted maintenance personnel assignments.

BATTALION S1 (ADJUTANT)

2-285. The battalion S1 is responsible for the battalion/task force's personnel service support functions. As the personnel manager for the battalion, the S1 provides replacement maintenance personnel in accordance with the commander's priorities. He/she assists the S4 with administrative/logistics operations center (ALOC) operations. The adjutant performs strength accounting and casualty-reporting duties in the combat trains.

BATTALION S2 (INTELLIGENCE)

2-286. The intelligence officer informs the commander regarding the enemy situation. CSS planners use intelligence data to plan future maintenance operations. The intelligence effort provides maintenance personnel with information concerning weather, terrain, and enemy force capabilities.

BATTALION S3 (OPERATIONS)

2-287. The S3 has staff responsibilities for the organization, training, and operations of the battalion and attached units. This officer provides current and future guidance on battalion operations and is responsible for the operation of the tactical operations center (TOC).

BATTALION S4 (LOGISTICS)

2-288. The S4 has primary staff responsibility for supply, transportation, and field services. This officer supervises all logistical elements in the battalion/task force and is responsible for the ALOC.

BATTALION MAINTENANCE OFFICER

2-289. The BMO is directly responsible for UMCP operations and controls maintenance support within the maintenance platoon. The BMO directs the maintenance effort to repair jobs within established maintenance repair time lines. He shifts maintenance assets to meet battalion/task force requirements according to the commander's priorities. The BMO maintains close contact with the battalion XO and S3 to remain current on the tactical situation.

2-290. The BMO coordinates maintenance support with the battalion S4 and the FSB's support operations section. This officer determines the location of the UMCP based on METT-TC elements. The BMO focuses on placing maintenance support forward to sustain maximum combat power. He coordinates with the FSB MST and establishes maintenance priorities. The BMT and battalion maintenance sergeant (BMS) assist the BMO in coordinating unit maintenance operations.

BATTALION MAINTENANCE TECHNICIAN

2-291. Located in the UMCP, the BMT assists the BMO in all maintenance repair operations. The BMT's primary function is to ensure that the maximum number of combat weapon systems are returned to the battle in the forward area. This technician controls BDAR, recovery, and maintenance operations in the forward area of the battlefield by maintaining continuous communications with the company maintenance team chiefs (CMTCs).

2-292. The BMT organizes and moves teams from the maintenance platoon forward to reinforce the CMTs. These maintenance teams provide maintenance resources (skills, test equipment, parts, and personnel) in addition to that provided by CMTs. The BMT determines which damaged weapon systems will be recovered to the UMCP and works with the FSB MST team chief to determine maintenance priorities. He/she alerts the BMO when the FSB MST requires reinforcement.

BATTALION MAINTENANCE SERGEANT

2-293. The BMS is the senior maintenance NCO in the battalion/task force. The BMS assists, and coordinates with, the BMO and BMT to control and prioritize maintenance operations in the field and combat trains. The BMS coordinates the maintenance workload with the FSB MST and directs the flow of repair parts from the field trains. The battalion maintenance sergeant is normally located in the field trains.

COMPANY PERSONNEL

2-294. The company headquarters consists of the company commander, executive officer, and first sergeant, a maintenance section, and a company supply section. It provides command, control, communications, administrative, and logistics support for the company. The XO, maintenance control officer (for maintenance units), first sergeant, and supply sergeant are the four key leaders. They have primary responsibility for CSS.

COMPANY COMMANDER

2-295. The HHC commander is responsible for the battalion/task force field trains. The commander establishes the HHC command post, coordinates support with the FSB, and serves as the battalion task force rear operations officer. The maintenance company commander plans, directs, and supervises the operations and employment of the company. The commander is responsible for providing maintenance support to the brigade. He provides guidance to the maintenance control officer concerning maintenance support and repair parts availability and technical supervision/assistance to supported unit commanders.

COMPANY EXECUTIVE OFFICER

2-296. The company XO is the logistical planner and coordinator. The XO works with the 1SG to ensure CSS activities are set up and supervised. He determines the general location for the company resupply point and receives constant updates concerning the status of vehicle maintenance and levels of supply. The executive officer serves as the second in command.

COMPANY FIRST SERGEANT

2-297. The 1SG is the primary logistics operator, who executes the logistics plan. The 1SG directly controls the combat trains, their movements, and employment. He receives, consolidates, and sends reports received from the platoon sergeants to the battalion ALOC. The first sergeant is responsible for all maintenance operations for the company and directs the efforts of the CMT.

COMPANY SUPPLY SERGEANT

2-298. The supply sergeant is the company's representative in the battalion field trains. The supply sergeant requisitions Classes II, IV, VII, and limited Class VIII items. He coordinates with the support platoon for Classes I, III, and V and assists the 1SG in establishing company resupply points and logistical package (LOGPAC) operations.

MAINTENANCE SERVICE SECTION NCOIC

2-299. The maintenance service section NCOIC organizes the section into teams based on guidance provided by the BMO and BMT. Teams are sent forward to reinforce the critical areas when requested by the BMT. Each team has an NCOIC and works under the direct control of the CMTC requesting reinforcing support. This NCOIC ensures deploying teams have appropriate skills, tools, test equipment, and parts to support the mission. He ensures all deploying teams have a link-up plan and location. Most of the NCOIC's effort is directed toward repairing equipment in the UMCP.

RECOVERY SUPPORT SECTION NCOIC

2-300. The NCOIC of the recovery support section coordinates the workload with the BMT to ensure priority of recovery in accordance with the battalion's mission requirements. The NCOIC ensures that crews are trained in both recovery operations and BDAR. He maintains communications with the crews at all times and is prepared to react to emergency surge recovery requirements.

RECOVERY EQUIPMENT OPERATORS

2-301. Recovery equipment operators are responsible for BDAR and for recovering disabled, damaged, mired, and abandoned vehicles. They perform unit-level maintenance on recovery assets. Recovery operators provide lift for maintenance operations, such as removal and replacement of power packs. Their duties include solving towing and rigging problems and making on-site repairs and adjustments.

COMPANY MAINTENANCE TEAM CHIEF

2-302. The CMTC organizes and directs CMT mechanics. The team chief identifies damaged combat weapon systems for recovery and is responsible for recovery operations to a collection point. The CMTC supervises BDAR and cannibalization efforts and controls all repair parts. The team chief works closely with the 1SG and responds to all maintenance requirements. When the team's workload is exceeded, the CMT chief requests reinforcement from the BMT. The chief, along with the BMT, is responsible for all maintenance operations forward of the UMCP.

COMPANY MAINTENANCE TEAM MECHANICS

2-303. Company maintenance team mechanics are controlled by the CMTC. They perform organizational maintenance and assist in recovery operations.

MAINTENANCE CONTROL OFFICER (MAINTENANCE UNITS)

2-304. The maintenance control officer (shop officer) coordinates directly with customer units and higher headquarters to accomplish the maintenance mission. This officer is the principal assistant to the company commander for DS-level maintenance operations and coordinates directly with supported unit BMOs. The maintenance control officer controls MST operations and also maintenance operations and technical assistance to supported units in the brigade area.

SYSTEMS SUPPORT TEAM (MAINTENANCE UNITS)

2-305. SSTs are task-organized into MSTs. MSTs move forward of the UMCP to perform on-site repairs. There is normally one MST per supported battalion/task force. The battalion/task force BMO establishes priorities for the MSTs while they are in the UMCP.

MAINTENANCE SUPPORT TEAMS (MAINTENANCE UNITS)

2-306. MSTs normally work in the UMCP under the control of the maintenance control officer. They are emplaced by, take instruction from, and follow the priorities given by the supported unit BMO. The MST, more familiar as a "contact team" in the H-series TOE, is tailored to fit the needs of the task force. The base structure for an MST comes from SSTs assigned to the forward maintenance company in the FSB.

Chapter 3

Maintenance Support Operations

Chapter 3 describes various types of maintenance operations, including maintenance support, production control, and maintenance during stability and support operations (SASO).

SECTION I – TACTICAL OPERATIONS

3-1. Section I discusses the employment of maintenance units throughout the battlefield. Unit-level maintenance is affected by the pace and type of combat. METT-TC determines location of supported equipment, workload, availability of support, and time available for repairs. Fast-moving situations reduce maintenance effectiveness. Increased distances degrade communications between maintenance teams. Each type of combat operation requires unique planning.

UNIT-LEVEL MAINTENANCE—OFFENSIVE OPERATIONS

3-2. The four general phases of offensive operations are preparation, attack, exploitation, and pursuit. Phases, which are roughly sequential, may develop into a more fluid operation or into a defensive operation. This potential for change must be considered in planning maintenance support of offensive operations. Offensive operations are marked by forward movement of combat elements. As the operation moves forward, support elements join in the movement.

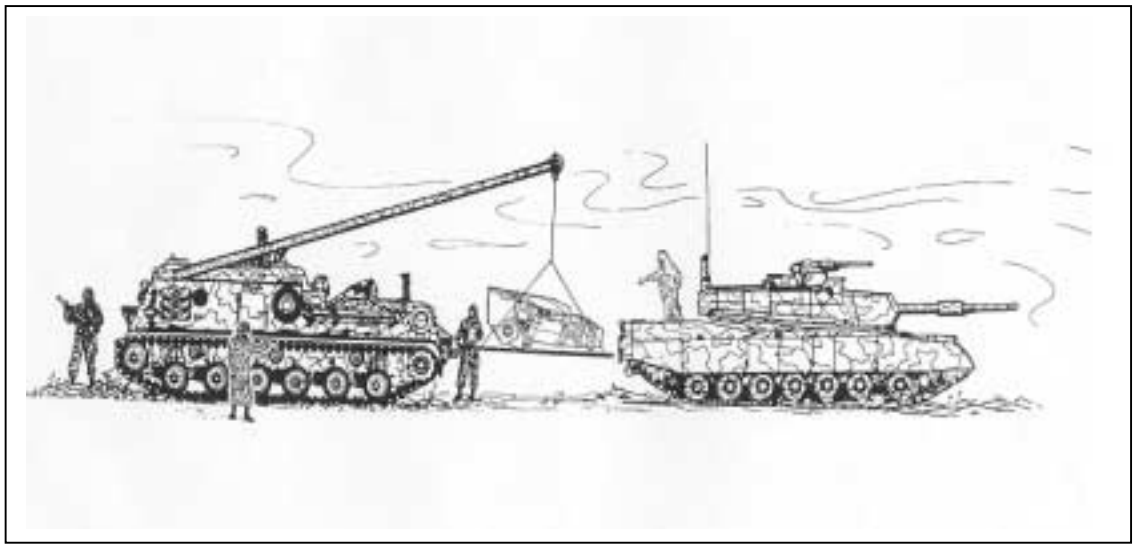

PREPARATION

3-3. Preparation involves the concentration of logistical support. Maintenance personnel place maximum maintenance effort on preparing

equipment for combat. The maintenance platoon in the combat trains moves closely behind the task force main body elements during this phase. The platoon's position in the march column is selected to support the combat units while protected from enemy fire.

ATTACK

3-4. The attack is quick and violent. The battalion maintenance officer monitors the tactical situation to support the attack. The BMO informs the S3 and S4 of specific UMCP locations. On-site maintenance support and recovery operations are accomplished with high risk.

3-5. During the attack, the majority of the maintenance platoon is located in the TF combat trains area. The CMTs are forward with the maneuver companies. Maintenance activities during this phase concentrate on recovery and BDAR. After the attack, the BMO coordinates maintenance requirements with the battalion XO. They discuss the current situation, priority of effort, and plans for the next operation.

EXPLOITATION AND PURSUIT

3-6. The TF covers a large area during the exploitation and pursuit phase. Combat units strike at objectives deep in the enemy rear while keeping pressure on retreating enemy forces. Command, control, and communications are extremely difficult. CMTs perform on-site repair. Equipment that cannot be repaired on site is recovered to the UMCP or BSA, whichever location can best complete the required maintenance. Maintenance platoon personnel perform quick repairs in the UMCP. Equipment in the UMCP may be repaired on the spot or evacuated to the field trains or brigade support area. The UMCP and the field trains move forward to support exploitation and pursuit operations.

PLANNING

3-7. Planners ensure maintenance operations support momentum and massing at critical points. Maintenance personnel maximize momentum by fixing inoperable equipment at the point of malfunction or damage. They enhance momentum by keeping the maximum number of weapon systems operational. Therefore, maintenance and recovery personnel perform their mission as far forward on the battlefield as possible.

RESOURCES

3-8. Organizational maintenance resources are in increased demand. Unit mechanics accompany or follow the most forward attacking elements. Plans include recovery of weapon systems that mechanics cannot fix within established maintenance repair time lines. Maintainers use battle damage assessment and repair (BDAR) to rapidly return disabled essential equipment to the commander.

DIRECT-SUPPORT-LEVEL MAINTENANCE—OFFENSIVE OPERATIONS

3-9. The maintenance unit commander prepares for support of offensive operations in much the same way as the maneuver unit commander. The maintenance unit commander appraises the combat situation, determines the needed support, and then organizes resources to provide the

maintenance support. DS maintenance units, as part of the division, must maneuver and deploy to provide maintenance support. Maintenance support operations are influenced by the division's deployment and its organization for combat, the tempo and type of combat operation, and the availability of suitable terrain.

COMBAT

3-10. In some combat situations, maintenance units are deployed well forward; in other situations, they are deployed to the rear. In some cases, maintenance units accompany or closely follow supported units; in others, they remain behind until ordered to move forward. In still other situations, the bulk of the maintenance units may deploy before supported units do.

3-11. The type and tempo of combat also affect the nature of the DISCOM maintenance units' workload. During fast-moving offensive operations, the maintenance shop workload may be light. When the advance slows or the pursuit phase ends, maintenance units must increase their activities. During the offensive phase, priority will be placed on recovery, BDAR, and roadside repair or on collecting, classifying, and reporting abandoned equipment.

COMMAND, CONTROL, AND COMMUNICATIONS

3-12. Offensive operations are characterized by fast movement and rapid changes in the situation. Command, control, and communications for the CSS effort are difficult. Maintenance elements normally operate as part of a larger CSS element, which reduces some of this difficulty.

Control

3-13. The DISCOM provides information to the division headquarters on the locations of all support elements operating in the division area. Under conditions of rapid movement and displacement, it is not always possible to provide specific information on the proposed locations of units in sufficient time for inclusion in division orders.

3-14. In a fast-moving situation, the DISCOM might be able to keep the division operations center informed only of its command post (CP) location. This information is contained in administrative orders, on operations overlays, or in fragmentary orders. With this minimal information, units must locate the DISCOM CP to obtain precise locations of subordinate units. The DISCOM continues to provide follow-up reports or situation overlays to support the division's daily operations report.

Coordination

3-15. In extremely fast-moving situations, DISCOM units operating in forward areas may move before advising the DISCOM headquarters. These units coordinate their movements and locations with the major subordinate command headquarters (normally brigade). Because of distances involved and communications limitations, it may not be possible for these units to effect timely notification to the DISCOM in the DSA.

3-16. However, since major subordinate headquarters report all new locations to the division operations center, the DISCOM headquarters will learn of new locations of brigade trains areas from the division TOC. Each DISCOM unit is responsible for notifying its parent headquarters of the

opening and closing of its CP and for providing advance information of planned moves. Advance information is essential for providing support forward.

OFFENSIVE GROUND OPERATIONS

3-17. Table 3-1 lists support procedures units should complete before initiating offensive ground operations.

Table 3-1. Support Procedures

Step	Action
1	Inspect and perform required maintenance on unit equipment.
2	Fill equipment shortages and repair parts stockage to authorized or directed levels, focusing on critical items.
3	Prepare and disseminate operations and administrative orders.
4	Establish support priorities, including priorities for issue of operational readiness float stocks and critical repair parts
5	Establish procedures, priorities, and conditions for resupply.

NOTE

At higher levels, plans, orders, and mission assignments are broad in scope. At successively lower echelons, plans are more complete and detailed.

PLANNING

3-18. Prior to offensive operations, maintenance planners should consider the following:

- Available support units.
- Stockage levels for repair parts.
- Forward placement of MSTs and UMCP.
- Channels and procedures for recovery, collection, evacuation, and disposition of captured or abandoned materiel.

RESOURCES

3-19. DS maintenance resources are in increased demand. DS maintenance elements in the form of MSTs may also operate with the spearhead of the attack. MSTs and other elements need the right people (skills, numbers), equipment (transportation, tools, TMDE, communications), and supplies (components, assemblies, repair parts).

REPAIR PARTS STOCKAGE

3-20. Repair parts stockage (in terms of days of supply) is kept consistent with mobility requirements. Based on type of operation, geographical area, and terrain/weather conditions, certain items are increased. For example, extensive operations over rough terrain dictate a buildup in stockage of vehicle springs, shock absorbers, and tires. Forward-deployed MSTs

increase stockage of small high-usage RX items like fire control instruments and automotive subassemblies.

OPERATIONAL TEMPO

3-21. As the tempo of the situation and the distance involved increase, support units may have difficulty keeping pace with requirements. Maintenance support is positioned as far forward as possible, normally placing MSTs with the BMO in the UMCP. In operations where the overall situation requires bypassing pockets of the enemy or guerrilla elements, the effects of bypassing on support units and other logistical activities must be considered. In some situations combat elements may be required to provide security.

REDIRECTION OF SUPPORT

3-22. CSS commanders and staff officers must plan for redirection of logistical support to satisfy changing tactical requirements. Redirection of effort and supplies, redeployment of units, realignment of the support structure, and changes in support procedures and emphasis take time and require close coordination and planning. Continuous movement limits the time available to make repairs.

OFFENSIVE MOMENTUM

3-23. If the offensive is successful and gains momentum, a culminating point may be reached where logistical support limitations make the entire force vulnerable. Lacking the ability to maneuver and displace as rapidly as combat forces, CSS forces may be outdistanced by combat units. Resupply of repair parts by unit distribution may break down or become ineffective due to lack of transportation, difficulty in locating units, and increased order ship time.

EXPEDIENT METHODS

3-24. The task force commander must be kept informed of the tactical situation's effect on the support structure's capability to provide the support required. Expedient methods for providing maintenance support under these circumstances include—

- Institution of BDAR.
- Authorization of controlled exchange
- Procedures and controls allowing MSTs to draw items anticipated to be needed from the main warehouse, ASL, or RX high-usage items.
- Increased emphasis on evacuation of unserviceable equipment, with repair operations in forward areas limited to component replacement, adjustment, and servicing.
- Round-the-clock operations by supporting units to the limits of physical endurance.
- Use of air transportation to move maintenance personnel and repair parts.
- Attachment of MSTs to tactical units.

MAXIMIZING REPAIR

3-25. Maintenance units must maximize repair efforts forward. Unserviceable equipment requiring more than limited component replacement, adjustment, and servicing will be recovered to a centrally located MCP. The centralized MCP maximizes BDAR cannibalization and controlled exchange operations. Unserviceable equipment requiring extended repairs is consolidated and turned over to follow-on maintenance elements. Figure 3-1 shows various maintenance activities and the flow of maintenance elements in the forward area in support of offensive operations.

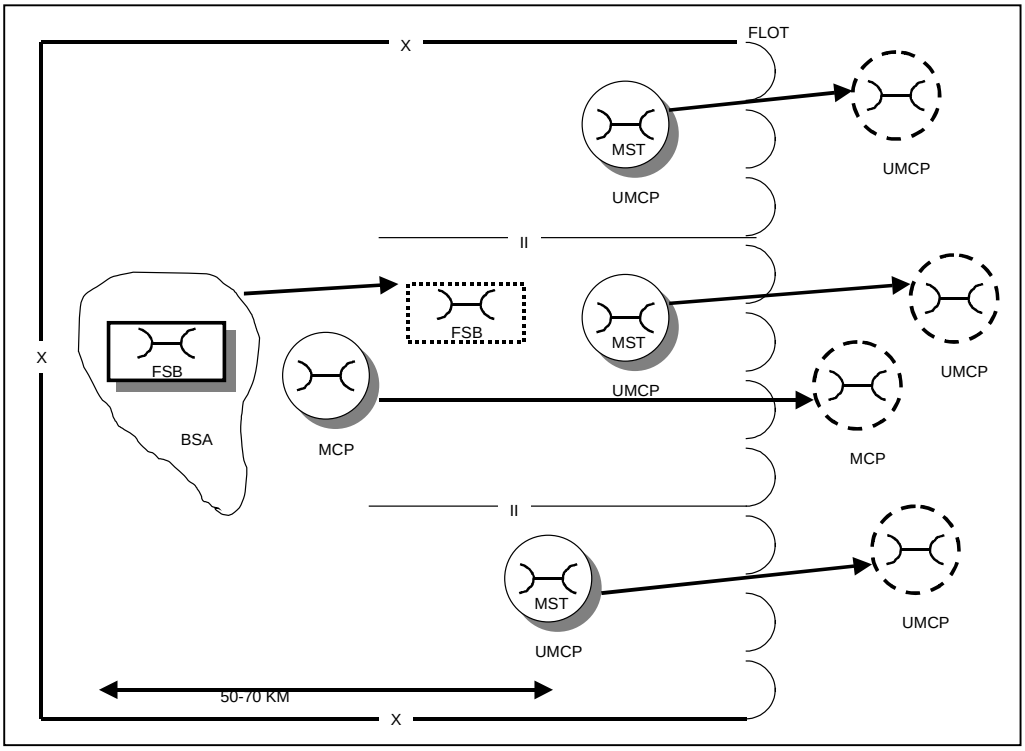

Figure 3-1. Flow of Maintenance Elements, Forward Area, Offensive Operations

UNIT-LEVEL MAINTENANCE—DEFENSIVE OPERATIONS

3-26. Types of defensive operations include area defense and mobile defense. Activities associated with defensive operations include counterattacks, passage of lines, withdrawals, and relief to continue the defense. Large defending formations, such as the division, may have portions of their forces conducting any of these operations or activities simultaneously. Defense may be static or dynamic. It takes a coordinated effort to defeat the attackers and prevent them from achieving their objectives.

MOBILE DEFENSE

3-27. Maintenance support of the mobile defense is marked by reduced available maintenance time, which reduces opportunities for on-site maintenance and CMT support. Equipment that cannot be repaired or recovered must be destroyed to prevent enemy capture.

AREA DEFENSE

3-28. More time is available for maintenance in the area defense when a unit is not actively engaged with the enemy. This provides an opportunity to conduct maintenance to improve materiel readiness.

PLANNING

3-29. The primary thrust of the maintenance effort in the defense is to maximize the number of combat-ready weapon systems that are ready. Once the defensive battle begins, the thrust is to fix the maximum number of inoperable systems and return them to the battle. This requires forward support at, or as near as possible to, the intended area of operation of the systems. Maintenance teams locate well forward. Likewise, critical components are placed forward to overcome the effects of combat wear and damage.

3-30. Planners also consider augmenting the maintenance support to covering force elements when they return to the main battle area. Such support may allow them to return more rapidly to fighting condition.

DIRECT-SUPPORT-LEVEL MAINTENANCE—DEFENSIVE OPERATIONS

3-31. Direct-support-level maintenance support for defensive operations must be planned, organized, and executed with the same attention to supported unit requirements as to offensive operations. Supported units in the defense are not as widespread as in the offense. Maintenance support operations can, therefore, be more centralized. Defensive operations also do not require displacement as often as in the offense, which simplifies command, control, and communications. The exception is support of retrograde operations like delay or withdrawal. The need for continued support while engaged in a unit move makes this a difficult operation to support.

MAINTENANCE SUPPORT TEAMS

3-32. MSTs deployed with maneuver units are task-organized to maximize on-site repair capability. A team may relocate several times a day, keeping pace with supported units. Maneuver organizational maintenance elements must assess unserviceable equipment for on-site maintenance or recovery to the nearest MCP.

FORWARD MAINTENANCE COLLECTION POINTS

3-33. The forward MCP generally contains MST elements not deployed with maneuver units. Initial BDA is made and a plan is formulated for each unserviceable item. MST elements notify follow-on maintenance elements of maintenance requirements beyond their capacity in order to allow follow-on elements to better allocate their maintenance resources. The base company and forward MCP must leap-frog forward in order to maintain continuous support.

MOBILE DEFENSE

3-34. A mobile defense requires maneuver and movement on the part of elements of the defending force. Maintenance units may also expect to move more frequently than during an area defense. In a mobile defense, maintenance requirements are greater than in area defense, particularly for tracked vehicles. This results in increased recovery distance from forward MSTs to maintenance elements farther to the rear.

AREA DEFENSE

3-35. In an area defense—

- The defending force remains in position for longer periods. Movement and maneuver of the defending force are considerably reduced in comparison to a mobile defense or an offensive operation.
- Support units are not required to move as often as in other types of operations.
- More time is available for maintenance operations.
- Maintenance facilities can operate better, since they do not have to react so often to changing situations and requirements.

REPAIR PARTS STOCKAGE

3-36. Repair parts stockage is generally focused on supporting critical weapon system components. Care should be exercised in selecting only needed items so as not to impair mobility. Equipment inspections and technical assistance are emphasized to maintain readiness at a high level.

DELAY AND WITHDRAWAL

3-37. Detailed planning, control, and coordination are required to support delaying or withdrawal operations. Emphasis is given to evacuation of unserviceable equipment that cannot be repaired before opposing forces overtake the position. Displacement of support elements must not conflict with the movement of combat units. When possible, maintenance support units should be displaced at night.

PLANNING

3-38. Maintenance plans must be closely coordinated with the tactical plan to provide maximum support without interfering with combat elements' operations. MSTs will be attached to tactical units to provide a rapid on-site maintenance capability.

UNIT-LEVEL MAINTENANCE—RETROGRADE OPERATIONS

3-39. Units are dispersed during retrograde operations. Command, control, and communications are difficult. A high degree of coordination is required. Movement of combat elements may be performed under enemy pressure.

3-40. Maintenance operations concentrate on quick repairs, BDAR, controlled exchange, and cannibalization. MSTs in the UMCP move to predetermined locations to support combat elements.

SUPPORT PRIORITY

3-41. Maintenance is concentrated on those weapon systems and materials directly required to support the retrograde operation. Priority of support should be given to units that have completed the movement to the next location and are preparing a new position. Emphasis must be placed on items that can be repaired most readily. Other equipment should be evacuated directly to future planned support areas. Extensively damaged and nonrepairable equipment should be used for controlled exchange or cannibalization.

EQUIPMENT RECOVERY

3-42. Destroy equipment that cannot be repaired or recovered to prevent enemy capture. Recovery capability is of utmost importance. The first method of choice is self- and like-vehicle recovery. Wheeled and tracked recovery vehicles are used at critical points to keep the route of march open. Recovery support sections remain close to the combat unit to assist the CMT's recovery assets.

3-43. Recovery equipment is critical to support of retrograde operations. Its use must be rigidly controlled and coordinated. Recovery equipment should be marshaled at critical locations to keep routes open and to recover all materiel possible. Badly damaged equipment should be evacuated or destroyed. Specific instructions must be provided for destruction of supplies and equipment.

PLANNING

3-44. Continuous maintenance support throughout the retrograde operation is essential to keep the maximum number of weapon systems operational. Maintenance planners should concentrate on providing essential support forward while moving the bulk of the maintenance units to the rear. They organize teams to provide support to essential weapon systems in the forward areas.

3-45. Maintenance efforts should concentrate on “quick fix” items, using assemblies brought forward to facilitate rapid turnaround of weapon systems. BDAR and fixing equipment take priority. Maintainers should maximize use of controlled exchange and cannibalization.

RECONSTITUTION OPERATIONS

3-46. Reconstitution is an extraordinary action used to restore units to a desired level of combat effectiveness commensurate with mission requirements and available resources. No resources exist solely to perform reconstitution. It is a total process whose major elements are reorganization, assessment, and regeneration. FM 100-9 contains more information on reconstitution.

REORGANIZATION

3-47. Reorganization is a shift of resources within a degraded unit to restore its combat effectiveness. Reorganization can be immediate or deliberate; it includes cross leveling, matching crews to equipment, and forming composite units from two or more attrited elements.

ASSESSMENT AND REGENERATION

3-48. Assessment and regeneration is done as far forward as possible so units may return to combat with minimum delay. It occurs normally in the support area two levels higher than the unit being reconstituted. It measures a unit's capability to perform its mission and evaluates regeneration needs.

3-49. Maintenance support of these operations initially consists of assessing the damage. It then shifts to repairing as many weapon systems as possible to meet the commander's priorities.

BATTLE DAMAGE ASSESSMENT

3-50. BDA is used to appraise major weapon systems status. This effort shows the number of items destroyed or damaged beyond repair in the forward area and the number that can be repaired forward. It also shows the location of forward maintenance and salvage collecting points and the transportation required to support recovery or evacuation. Mechanics concentrate on mission-essential maintenance only and the priorities established by the senior commander.

NIGHT OPERATIONS

3-51. Night operations use the same organization and require the same functions as daylight maintenance support. Commanders continue to effect internal adjustments of their organic maintenance assets to meet unique situations. Additional maintenance assistance is requested from higher echelon resources when needed. Maintenance elements retain responsibility for performing their assigned function. Those that must be deferred until daylight remain the responsibility of the deferring maintenance element.

TRAINING

3-52. The goal of night maintenance operations is to attain the same degree of effectiveness as in daylight operations and to sustain the effort over long periods of time. Intensive night training is a key element in attaining this goal. Such training improves the capabilities of unit personnel performing technical tasks under less than normal light conditions and provides a sound basis for developing a night maintenance SOP.

3-53. Tasks that cannot be performed under subdued visible light or night vision goggles are identified. Procedures are developed for deferring them until daylight hours. Procedures are developed for preposition of equipment, tools, and repair parts supplies to allow ready access, identification, and handling at night. Procedures for night movement and relocation stress light discipline and camouflage.

PLANNING

3-54. Detailed planning for maintenance support of night operations is essential. Maintenance support planners must provide a realistic assessment of the capability to support night operations.

3-55. The assessment is based on the degree of proficiency attained by the maintenance elements concerned in training and on the SOP for night maintenance operations. Requirements must be identified and coordinated

for additional maintenance support from higher echelons to assist in working off the repair of items deferred for daylight maintenance.

3-56. With the present night vision technology, planners must anticipate built-in backlog each morning. They must ensure that the maintenance support plan provides timely support without interfering with or compromising the tactical plan.

PROCEDURES

3-57. Using night vision devices, organizational and DS maintenance elements repair and return to service those critical items within their repair capability. Night vision devices are used for tasks that must be done outside. Bulky items or repair parts supply, as well as equipment and tools, are pre-positioned for rapid location, identification, and handling during the night.

3-58. Where enemy observations may be possible, field expedient drape-type shelters are constructed to hide the light source. Lightproof shelters with visible subdued light are used for the repair of small items of equipment like radios and small arms. They also provide a place to use required technical manuals. The tactical commander must approve the use of subdued visible light.

3-59. Night recovery is conducted on a case-by-case basis depending on the tactical situation and the need for recovery of the item. Equipment, tools, and repair parts are prepositioned and marked for easy location, identification, and handling. Elements must also be concerned with aerial observation of heat and light source signatures. Where required, the supported unit provides security for the recovery element. MSTs that may be dispatched from support elements into areas farther forward should have night vision devices.

NBC ENVIRONMENT

3-60. Maintenance personnel must be prepared to provide maintenance support on the integrated battlefield. To do this, individual soldiers must be trained to survive an initial nuclear, biological, or chemical attack and to continue the mission in a toxic environment under great mental and physical stress.

3-61. Leaders must recognize that performance in an NBC environment is greatly degraded, which has a detrimental effect on mission performance. Refer to Table A, FM 3-4, which highlights this performance degradation. Long-term problems caused by contamination make it doubly important that maintenance units protect themselves. When possible, maintenance activities should occupy protected areas like underground garages or concrete buildings to provide cover from liquid chemical agents and shielding from radioactive contamination.

CONTAMINATED EQUIPMENT

Standing Operating Procedure

3-62. Units should establish SOPs for contaminated vehicle and equipment maintenance procedures:

- Responsibilities for establishing and operating contaminated and uncontaminated MCPs.
- Procedures for operating contaminated and uncontaminated MCPs.
- Procedures for performing unit-level hasty decon or requesting deliberate equipment decontamination from an NBC defense company.
- Procedures for contaminated equipment inspection.
- Procedures for repair without electronic test equipment (destroyed by blast or electromagnetic pulse [EMP]).

Hazards

3-63. There are special hazards involved in working on contaminated equipment:

- Petroleum products tend to trap chemical contaminants.
- A vehicle that is safe for an operator without MOPP-4 protection may be unsafe for a mechanic to repair.
- Chemical contaminants may collect in bolt threads, hydraulic fluids, and closed assemblies. For example, a mechanic might break open an air filter and be exposed to lethal concentrations of hazardous vapors. Casualties could be high unless all repairs and preventive maintenance on previously contaminated vehicles are done in MOPP-4.
- Oil, grease, and dirt seriously degrade the protective qualities of a chemical overgarment. Mechanics must keep themselves as clean as possible. Extra overgarments should be on hand to replace dirty ones.
- Wet-weather gear helps keep overgarments clean but increases heat buildup and will eventually be penetrated. The combination of protective gear and wet-weather gear provides good (although hot) protection from a combination of toxic chemicals, grease, and oil contamination. Fuel handlers' aprons and field expedient rubber sleeves provide some added protection with less heat buildup.
- Mission performance is greatly degraded. Repair times are significantly increased with increased MOPP levels. This reduced capability affects the combat readiness of supported units.

Control Principles

3-64. Do not spread contamination or bring contaminated equipment into a clean area. Units may establish separate MCPs or, at a minimum, separate storage areas for contaminated and uncontaminated equipment. Mark equipment to protect others. Every effort must be made to repair contaminated equipment in a contaminated area.

3-65. At the MCP BDA/NBC detection point, all personnel and equipment returning from forward areas are properly routed to control the spread of contamination during the repair process. Units will establish an NBC control point for monitoring and decontaminating personnel. Equipment will be decontaminated prior to evacuation to the supporting backup DS-level maintenance facility. All equipment evacuated must be marked with the level of decontamination it has undergone. All equipment evacuated to EAC must be decontaminated and marked using the x-system.

Marking Vehicles and Equipment

3-66. Mark vehicles and equipment to protect others. Vehicles and equipment that are contaminated or that have been deconned to low-risk levels for operators and crews could still present a serious hazard to mechanics. They need to know that the equipment has been contaminated.

Standard contamination signs

3-67. Contaminated vehicles must be identified with standard triangular contamination signs on all four sides and at the operator's controls. The type and date of contamination should be written on the signs. The signs should be easily visible from the outside of the vehicle. Contamination signs on vehicles and equipment contaminated with persistent agents will not be removed even after decontamination. Nonvehicular equipment should be similarly marked in a conspicuous location.

Additional marking system (x-system)

3-68. An additional marking system may be used to alert personnel of possible hazards as well as to show the level of decontamination the equipment has undergone.

3-69. The x-system is the easiest to use. The mark must be made in a contrasting color so that it can be seen from all directions. If a vehicle is marked, the logbook must specify where the contamination was located as well as the results of each decontamination attempt. See Table 3-2 for a description of the four levels of decontamination.

Table 3-2. X-System

Level	Description
X- One	Item is contaminated; no decontamination was attempted.
XX- Two	Item underwent immediate or operational decontamination: • Crew or individual soldier removed gross contamination and prevented its unnecessary spread. • Item should still be handled very carefully; only gross surface contamination was removed.
XXX - Three	Item underwent a more detailed decontamination: • Detection tests after decontamination attempts show negative results. • Disassembly may not have been done; some contamination may be discovered if item is broken down further.

Level	Description
XXXXX - Five	Item was disassembled and completely decontaminated: • Completely disassembled and usually exposed to extreme heat for sufficient time to completely destroy all of the agent. • If item could not be subjected to heat, other methods ensured absolute decontamination.

NOTE

A contaminated item is marked initially and then modified as different levels of decontamination are reached.

3-70. No item without at least an XX marking will be taken into MCPs. A detailed decontamination results in an XXX marking. Corps chemical unit decontamination results in an XXXXX marking. Only those marked XXXXX will be evacuated to EAC.

Disposition

3-71. Whenever possible, return contaminated repaired equipment with no more than a negligible risk to the owning contaminated unit. Even if equipment has gone through hasty decon, it can still be hazardous to handle. A previously contaminated unit will already be conducting periodic contamination checks and will be able to use the equipment safely because of the precautions being taken.

Evacuation

3-72. Contaminated equipment and tools must be stored at a location downwind of clean areas. Every effort must be made to control the spread of contamination. Contaminated vehicles and equipment should not be sent to the base shop for repairs. NBC considerations may outweigh established maintenance repair timelines. If DS-level maintenance is required, an MST will be sent forward to make repairs in the contaminated MCP. DS maintenance units should treat all customer equipment as contaminated until detection equipment proves otherwise.

Tools

3-73. Since it is difficult to decontaminate equipment well enough to eliminate risk to mechanics, it may be impractical to decontaminate tools and equipment used to repair contaminated equipment. Segregate tools and equipment used to repair contaminated equipment from other tools. Use these contaminated tools and equipment to repair contaminated equipment.

SAFEGUARDS

3-74. Even though decontamination is done, MSTs cannot be sure that toxic vapor trapped by oil or held inside a closed assembly will not appear at some point during the maintenance process. Because decon cannot guarantee safety for unprotected mechanics, the maintenance officer must decide which MOPP level mechanics should use. This is a tactical decision. Mechanics should use MOPP levels consistent with the threat and the mission.

3-75. Safeguards must be taken to protect people both inside and outside contaminated areas. Chemical agent detection equipment should be operated while contaminated equipment is being repaired. The testing must be a continuous process. Vapor hazards may not be present in open terrain; but as soon as the vehicle is moved into an area where air does not circulate, significant toxic vapors may concentrate.

CONTAMINATED PARTS REMOVAL

3-76. If a vehicle is contaminated and a part removed for use elsewhere (controlled exchange), the part must also reflect the appropriate level of decontamination. This must be done due to the possibility of hidden contamination. Potentially, a removed item could contain a hidden agent that was never detected. It could pass through all the various levels of maintenance and then be released once it is disassembled. It is worth the few seconds it takes to mark an XXX.

CONTAMINATED ASSEMBLIES

3-77. If contamination is detected after an assembly is opened, the assembly can be deconned quickly by flushing with diesel fuel or motor gasoline. The unserviceable component must then be marked and taken to the contaminated holding area, where it can undergo more thorough decon. For reparable assemblies, personnel should either wait until the assembly no longer gives off vapor or replace it with a new assembly. The fuel used for flushing must also be marked "contaminated" and dumped into the contaminated sumps at the decon site or disposed of per unit SOP.

RADIOLOGICAL CONTAMINATION

3-78. Maintenance personnel repairing equipment with radiological contamination should wear dosimeters and be closely monitored for radiation exposure. They must never exceed exposure levels. When the highest acceptable levels are reached, personnel should be replaced, mission permitting.

3-79. The amount of radiological contamination that personnel should be exposed to will vary depending on operational exposure guidance and the tactical situation. Priority for monitoring equipment should go to the recovery teams, then to inspection points, and then to the MCP. MSTs should satellite off their supported units for NBC monitoring as much as possible. Figure 3-2 shows how an MCP is set up to accommodate both contaminated and uncontaminated equipment repair on the integrated battlefield.

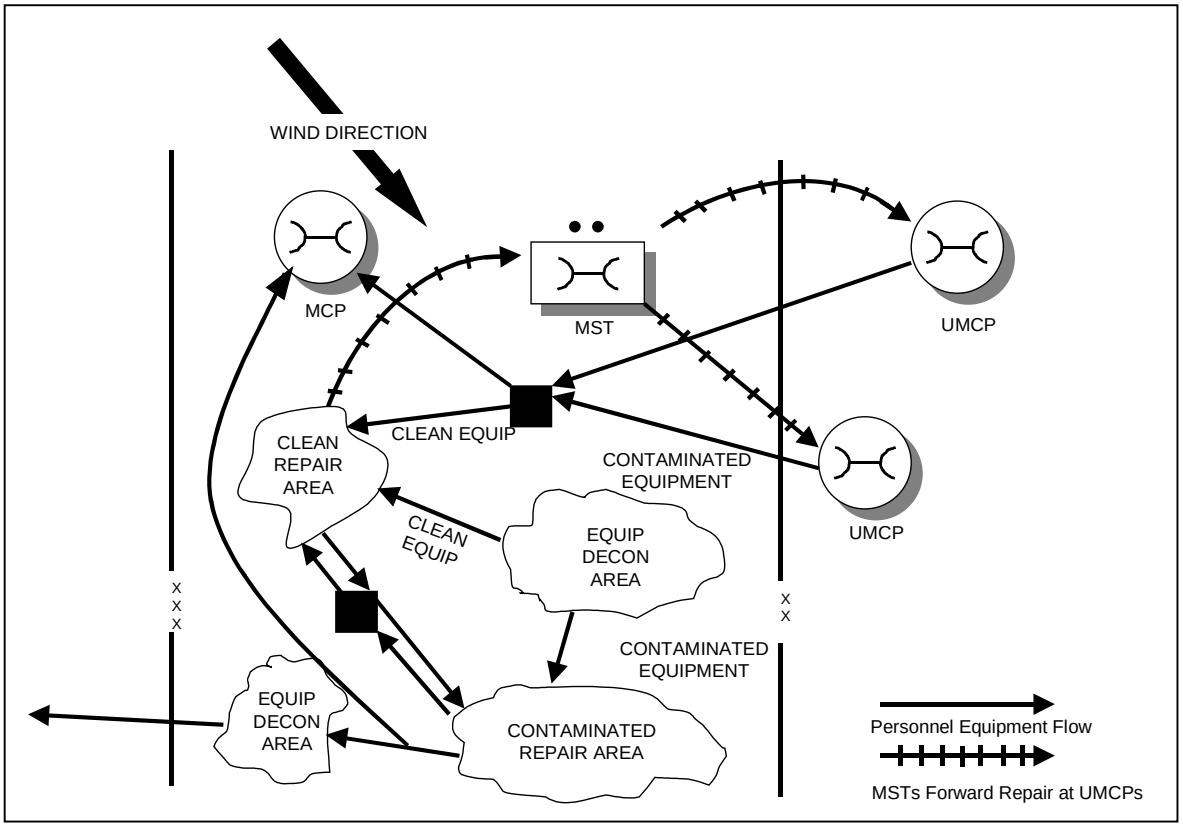

Figure 3-2. MCP for Contaminated and Uncontaminated Equipment Repair

CLEAN AREA SUPPORT STRATEGY

3-80. The strategy for supporting from a clean area is the prevention of contaminated personnel from entering the clean area. Work within a clean area can thus be done at reduced MOPP and with greater efficiency. When NBC attacks occur within the combat area, the unit must assume that all equipment is contaminated, and the maintenance unit will set up separate inspection points and MCPs.

3-81. All vehicles, personnel, and supplies must pass through the inspection point before they enter the maintenance area. Here, inspectors in MOPP-4 can use heaters or torches to warm equipment while they check it for contamination. The vapor hazard from liquid contamination may be undetectable at 65°F (18°C) in the open yet become lethal at 80°F (26°C) or when brought into a closed area. Some biological contamination, including toxins, may not be detectable. Assume contamination is present if the equipment came from a known contaminated area. Radiac meters can easily detect radiological contamination.

INSPECTION TEAM

3-82. The inspection team must segregate the equipment. Uncontaminated equipment can go straight to the clean maintenance area. Contaminated vehicles and equipment must be marked with contamination signs.

3-83. A decision must then be made on the disposition of each item. If equipment is contaminated and repairs can be performed in MOPP-4, the item is sent through decontamination or left to weather. If weathering is the choice, the marked equipment is placed in a holding area where it can decontaminate itself. Waiting for equipment to weather before repair may be a luxury a commander cannot afford. In cool weather, weathering can take weeks. If the choice is to decontaminate, consider the following:

- Before any repairs are made, equipment should go through decontamination to a level deemed necessary by the command.
- Priority equipment must be decontaminated first. Setting priorities is often not easy. For instance, there may be four armored personnel carriers equipped with antitank weapons. If they are lightly contaminated, perhaps all four could be decontaminated and repaired in the time it would take to decontaminate and repair one heavily contaminated tank.
- Decisions require coordination between maintenance units and operational staffs.

Decontamination

3-84. Decontamination should be done only if it is cost-effective. When a persistent agent is involved, every effort should be made to replace a contaminated component with the next higher assembly that can be replaced in MOPP-4. Contaminated equipment or components should be marked and placed in the holding area to await disposition instructions from higher headquarters.

On-Site Maintenance

3-85. Uncontaminated teams should not perform on-site maintenance and generally should not attempt recovery of contaminated equipment. Unserviceable, contaminated equipment and vehicles should be recovered to the decontamination site or contaminated MCP by other contaminated vehicles.

SUPPORT TEAMS

3-86. Both organizational and DS-level maintenance activities will send teams forward to repair or recover vehicles and equipment if it is unknown whether the vehicles and equipment are contaminated. Teams must be in MOPP-4 and they must test the equipment for contamination. Testing is a continuous process. Vapor hazards may not be present in open terrain, but significant toxic vapor may concentrate as soon as the vehicle is moved into an area where air does not circulate.

3-87. If contamination exists, the teams must decide whether or not repairs can be made in MOPP-4. If they cannot, the equipment must be deconned. Any surfaces the team will touch to repair or recover the vehicle must be given an operator's hasty decontamination with an on-board decontamination apparatus (such as the M11 or M13). This will not reduce

the level of MOPP needed, but it will offer some additional protection and limit the spread of contamination.

3-88. Tools used for contaminated equipment maintenance may remain contaminated if further maintenance of contaminated equipment is needed. Use rags to wipe off only the gross contamination. Dispose of the rags in a sump or bury them and mark the location. Teams may go through a MOPP gear exchange or detailed troop decontamination, but the team's equipment and tools should be left alone.

3-89. A fresh team can use the contaminated tools on other contaminated equipment. For extended repairs, a rested team relieves a contaminated team, which moves back and undergoes detailed decon. After a rest, the newly deconned team rotates forward and relieves the contaminated team.

TIME AND RESOURCES

3-90. It may be possible to extend the length of time the unit can continue to support from a contaminated location by scheduling periodic withdrawal of personnel to a clean area for complete personnel decontamination and a rest period at a reduced MOPP level. For continued effectiveness, however, the unit must leave the area, go through a detailed equipment and decontamination process, and set up shop in a clean area.

3-91. Time may dictate that only the most critical repairs continue while a portion of the unit moves to a clean area. Limited organic transportation may require that some unit and customer equipment be left behind. After reorganization at the clean area, this equipment may be recovered or repaired using the procedures described for supporting from a clean area.

CONTAMINATION AVOIDANCE

3-92. Avoiding contamination should be the keystone of the support strategy in an NBC environment. Unit NBC defense personnel should monitor the NBC situation by maintaining contact with higher headquarters and their counterparts in supported units. Before dispatch of MSTs, as much information as possible must be obtained relating to the threat along the route of march and at the support location. The location and availability of complete equipment decontamination stations must be carefully monitored. These facilities are operated under the supervision of elements of the corps chemical company.

SECTION II – NONDIVISIONAL MAINTENANCE UNITS

3-93. Section II discusses the employment of maintenance units throughout the battlefield.

MAINTENANCE BATTALION

3-94. The DS maintenance battalion normally provides support to all units located in or passing through a designated area, although it may operate in whole or in part in support of specially designated units.

LOCATION

3-95. The battalion normally operates from multiple locations within its assigned area of operations. The HHC is located as centrally as possible within the area. Maintenance companies are located in various parts of the battalion area of responsibility and are oriented on equipment densities. Factors affecting the position of DS units include—

- Tactical situation.
- Road network.
- Availability of suitable terrain for CSS.
- Security requirements.
- Location of other support activities.

3-96. Maintenance companies may be temporarily attached to another DS maintenance battalion when the situation warrants. For example, when one DS battalion of a support group is not employed to the full extent of its productive capacity, while the other battalion in the group has exceeded its capacity, a temporary attachment of maintenance assets to the overtaxed battalion may be necessary.

REPAIR EXCEEDING CAPABILITIES

3-97. Maintenance is performed either in the supported unit with MSTs or in MCPs of DS maintenance companies. Equipment exceeding repair capabilities or capacities of the maintenance company may be evacuated to another DS maintenance company in COSCOM or TAACOM or a GS maintenance unit in theater.

BATTALION HEADQUARTERS

3-98. The battalion is assigned specific areas of responsibility by the ASG or CSG based on mission assignments made by COSCOM or TAACOM. In the support area assigned to the battalion, the headquarters assigns specific areas to attached unit commanders and assists in reconnoitering sites for new areas of operation. Support group headquarters is continually kept apprised.

MISSION

3-99. Battalion headquarters keeps track of workload, production, and maintenance issues of subordinate units through reports, visits, liaison, and briefings. The battalion headquarters must also stay alert to potential changes in mission and inform subordinate units accordingly. Mission

changes might include support of new units, changes in unit end item priority, and a requirement for repair parts fabrication. Battalion headquarters provides attached units with pertinent instructions governing operations and performs maintenance management and staff supervision to ensure adherence to established policies.

AUGMENTATION

3-100. When the workload exceeds the unit's capability or capacity, the battalion headquarters makes appropriate recommendations to the CSG/ASG and MMC concerning augmentation requirements. Such action is taken only when maintenance management and control within the battalion will not solve the problem. Battalions normally contain at least three maintenance companies. When one of them becomes overloaded, battalion headquarters may augment that unit's capacity by temporarily attaching personnel and equipment from another unit.

NONDIVISIONAL (DS) MAINTENANCE COMPANY

3-101. The company establishes its base of operations in the area with greatest equipment density in its AOR and locates it as centrally as possible within the area. The area selected for operations should be adjacent to a good road network to facilitate easy access to supported units.

MISSION

3-102. The company provides DS-level maintenance, repair parts supply support, and technical assistance to units in its AOR. It may be tasked to provide backup or passback support to other maintenance companies and recovery/evacuation assistance to supported units. Out-of-sector support for specific operations may also be a mission of this company. METT-TC will determine the length of time a nondivisional DS maintenance company occupies a single field site.

ON-SITE MAINTENANCE

3-103. The company provides on-site maintenance to supported units when practical. This service is provided with the dispatch of properly manned and equipped MSTs to a supported unit UMCP or to the site of equipment failure. All company elements provide personnel for on-site maintenance as directed by the maintenance control section and set forth in the applicable TOE.

3-104. After receiving equipment, the maintenance control section inspects the items that can be inspected and fault-diagnosed without disassembly. It then schedules equipment for shop repair, depending on shop workloads, parts availability, priority of requesting unit, and priority of the specific equipment to support current operations.

SMALL ITEMS

3-105. Normally, small items and items requiring some disassembly (C-E equipment) or diagnosis using TMDE are sent to the appropriate maintenance shop after receipt. In the company, DS-level repairs consist of—

- Troubleshooting/replacing defective components and modules.
- Tightening and adjusting components.

- Welding operations.
- Repairing minor components using repair kits.

RECORDS AND REPORTS

3-106. Under a fully automated maintenance management system, most maintenance data and reports required by higher headquarters are submitted on diskette or transmitted by modem. The company operates SAMS-1 to manage maintenance and transmit data to the battalion support operations section. Data submitted by SAMS-1 pertains to DS maintenance company operations. The battalion support operations section transmits SAMS-2 data to the CSG/ASG, support operations section, or directly to MMC.

WORKLOAD

3-107. Normally, items repaired by the DS maintenance company are returned to supported units, except for items repaired for return to RX stocks (starters, generators, fuel pumps, etc) or to operational readiness float. Items repaired in a backup role are returned to the supported maintenance unit or direct support unit (DSU).

3-108. Workloads exceeding the company's capacity or capability are evacuated according to disposition instructions provided by the MMC. Instructions, which are normally preset, designate shipment to specific units based on type and condition of the item.

3-109. Items reparable at the GS level are evacuated through the Class IX supply system to a sustainment maintenance base. Certain items with specific condition-codes are evacuated to a C&C company. The maintenance company is required to report critical, controlled, or short-supply items to the MMC before evacuation.

NONTACTICAL INFORMATION SYSTEMS

3-110. The Defense Information Systems Network (DISN) is a worldwide, nontactical communications network established by the Department of Defense. The Defense Information Infrastructure (DII) is a worldwide complex of DOD-established information systems networks and control centers organized into a single, seamless, interoperable, long-haul, general-purpose Theater Communications System (TCS). DII facilities may be operated by any of the US armed services. In a theater of operations where the Army manages the DII, the responsibility is assigned to the theater signal command—Army (TSC-A).

3-111. The TSC-A commanding general has the mission to establish, operate, and control the TCS. The commander responds to the operational direction of the Army service component commander (ASCC) and the Defense Information Systems Agency (DISA) for the DII (Army) under his control. The TSC-A is responsible for expanding and restoring DII web links in theater and for providing liaison and interface to DII networks managed by the other services. During wartime, the TSC-A provides information systems support to the wartime theater army and its forces in the theater of operations.

3-112. DII and TSC-A fixed information systems facilities use fixed-plant, COTS, and complex systems unique to TCS or DII operations. System

complexity, criticality, and equipment configurations mandate that logistical support for nontactical information systems equipment be provided differently than for ASCC tactical equipment.

LOCATION

3-113. Supported sites may be dispersed over a large geographical area, and the equipment maintained may be unique to the theater of operations. A theater may use equipment operating in a frequency range different from another theater's. Equipment may include systems manufactured in the host nation.

SUPPORT ORGANIZATION

3-114. The TSC-A commander is responsible for the operation and maintenance management of facilities and resources that support, or relate to, the DII. The organization created to provide logistical support to nontactical information systems in TSC-A is the area maintenance and supply facility (AMSF). The AMSF may be a TDA organization or an MTOE organization with TDA augmentation. The AMSF provides both maintenance and supply support for TSC-A supported equipment. If specified in the mission statement or statement of work (SOW), the AMSF may operate as well as maintain telecommunications facilities for the TSC-A. The AMSF provides logistics support to fixed-station, semifixed, and special transportable information systems. Maintenance support provided by an AMSF includes DS, GS, and SRA levels.

FUNCTIONS

Maintenance

3-115. Maintenance functions performed at the AMSF include repair of components, assemblies, modules, and printed circuit boards (PCBs) evacuated by supported sites or MSTs. These include COTS equipment and systems. Repairs require specialized skills, special tools, TMDE, and disciplined quality control. Repaired items are returned to the sites or RX, or they are restocked in the AMSF. Items beyond AMSF's repair capability or the AMSF contractor SOW's scope are returned to the manufacturer for repair.

Supply

3-116. The AMSF provides C-E repair parts for information systems operated at supported sites. It maintains a stockage of repair parts, circuit components, modules, subassemblies, special design tools, and test equipment for its own operation as well as supported site requirements. The AMSF provides complete support for all peculiar repair parts requests and organizational PLL. Repair parts support to customer units does not include repair parts for other items of organizational equipment, such as automotive, arms, and NBC equipment. Non-C-E parts support is provided by the DS maintenance unit of the theater CSS organization charged with the normal DS support mission.

3-117. AMSFs requisition C-E repair parts and supplies directly from the appropriate CONUS national inventory control point (NICP) and other wholesale sources as prescribed by integrated logistics support (ILS) plans and wholesale interservice supply support agreements. They also receive,

store, maintain accountability for, and issue nonforce organic information systems project materiel and equipment (formerly referred to as Class IV project materiel) in support of the DII (Army).

Operational

3-118. If specified in the mission statement or SOW, the AMSF may also operate as well as maintain *selected* DII telecommunications facilities, AUTODIN, Standard Theater Army Command and Control System (STACCS), Defense Red Switch Network (DRSN), and government-owned, contractor-operated (GOCO) facilities in theater for the TSC-A.

SECTION III – LIAISON, ON-SITE, AND EMERGENCY SERVICES

3-119. Section III describes the liaison, on-site, and emergency maintenance services of DS maintenance units. Maintenance units must be mission-oriented and proactive in providing as much assistance to customer units as possible. Customer-oriented support is the overriding principle that all DS maintenance operations are based on. Maintenance units will provide on-site maintenance to supported units whenever practical. On-site support keeps the maximum amount of serviceable equipment in the hands of supported units, reduces operational downtime for certain types of equipment, and provides supported units with on-the-spot instruction and advice to improve their operations. It also reduces the maintenance unit's workload, as well as handling and transportation requirements that would be needed if all unserviceable equipment were work-ordered to the maintenance unit for repair.

LIAISON VISITS

3-120. To provide adequate, effective support, the location of the supported unit, its equipment status, repair parts supply status, equipment density, and repair requirements must be determined. Upon being assigned a support mission and arriving in their operating area, DS maintenance units perform liaison visits to make initial contact with supported units.

3-121. The support operations officer (SOO), accompanied by one or more key personnel, makes initial contact. Supported units are informed of the supporting unit's location, services to be provided, and procedures for obtaining these services. Maintenance and repair parts issues and requirements are discussed. After initial contact, liaison is maintained on a frequent basis. The DS unit commander makes additional visits to supported units to maintain good working relationships.

TECHNICAL ASSISTANCE

3-122. Technical assistance is providing instruction and technical guidance to supported units to enable them to perform their mission more efficiently. It can increase the quality of maintenance at the unit level, thus reducing the workload at the DS level. Technical assistance may be provided formally by the AMC Logistic Assistance Program or MACOM-level maintenance assistance and instruction teams (MAITs). The DS maintenance unit commander may also provide assistance informally. Technical assistance includes visits by technical assistance teams made up of competent experienced soldiers from the DS unit. The team's functions include, but are not limited to—

- Advising the supported unit commander on the responsibilities for unit-level maintenance and repair parts supply.
- Determining the nature and scope of maintenance support required so that a properly manned and equipped MST can be sent to provide on-site maintenance.
- Assisting the supported unit in the operation of maintenance management automation (ULLS-G).

- Discussing and resolving mutual maintenance support issues regarding personnel, equipment, or operational procedures and policies.
- Helping the unit commander evaluate equipment condition and the effectiveness of the maintenance program and formulate required remedial action.

ON-SITE MAINTENANCE

3-123. On-site maintenance support includes—

- Performing maintenance at the location of equipment failure or at the supported unit's MCP.
- Delivering repair parts directly to supported units.
- Providing technical assistance.

It also includes liaison visits to identify issues and requirements of supported units and to inform them of the support available and the procedures required to obtain it. Liaison teams and MSTs provide on-site maintenance support.

MAINTENANCE SUPPORT TEAMS

3-124. MSTs perform on-site maintenance. They may also be used to help supported units determine the condition of supported equipment and to provide advice and assistance for correcting equipment failures noted in inspections. The MST organization varies according to the mission.

Employment

3-125. Employment of MSTs depends on maintenance support requirements. Some teams are dispatched in response to a specific requirement in a specific area. They return to the DS unit after completing their mission. Other teams may operate away from the DS unit in a UMCP for extended periods. The maintenance control officer determines how the MST operates. It depends on the mission of the team concerned and known requirements for on-site maintenance support. MSTs not only are dispatched as a result of requests from supported units, but also to satisfy planned operations such as responses to anticipated requirements.

Equipment

3-126. MSTs will be equipped with the tools, equipment, and repair parts needed to do a specific job. When requesting on-site maintenance, supported units report the type of malfunction and any known parts requirements. MSTs must also know the supported unit's equipment density and any special support requirements (welding, for example). This helps determine the proper composition of personnel, equipment, and repair parts for the MST organization.

Personnel Assignment

3-127. When possible, personnel and supervisors are assigned to an MST permanently. This simplifies management, facilitates cooperation, and promotes better understanding of the job by team personnel.

ENVIRONMENTAL/TACTICAL SITUATIONS

3-128. The environmental or tactical situation and reports from supported units often permit an accurate forecast of on-site maintenance requirements. Caution and good judgment must be used. In a situation where supported units operate from remote locations, it may be necessary to attach a DS MST temporarily to the supported unit.

3-129. The relative merits of transporting personnel and equipment to repair items, as opposed to receiving items at the company base, must be weighed before a decision is made. This is especially true in situations where air transport is the only means of personal contact. In these situations, great reliance must be placed on providing DS-level maintenance at the supported unit's location, especially for maintenance of heavier and bulkier items, which are difficult to transport by air.

EMERGENCY MAINTENANCE SERVICE

3-130. Besides providing DS-level maintenance to specific units in a specific geographic area when requested, each DS maintenance unit provides emergency maintenance support. This service may be provided at the roadside, in the DS shop, or on site.

ROADSIDE SERVICE

3-131. Roadside service may consist of the repair of disabled equipment, BDAR actions, or recovery of disabled vehicles. Normal BDAR repair involves a minimum of parts, tools, and time. Fuel system failures, overheated engines, and electrical failures are the usual malfunctions. The form and scope of emergency roadside service are governed by need, the weather, the tactical situation, and traffic. Road patrols, recovery service, or maintenance elements at refuel points provide this type of service.

Road Patrols

3-132. Road patrols consist of two or more automotive mechanics in a light vehicle carrying a small stock of repair parts, repair kits, and tools. Patrols are dispatched and routed so they will pass any given point on a main supply route (MSR) at least every two hours. However, road patrols reduce the unit base shop maintenance capability. Emergency service is rendered on the spot to any disabled vehicle found along the route. When necessary, a recovery vehicle is called by the patrol to recover the disabled equipment to an MCP, evacuation point, or the DS maintenance shop.

Recovery Vehicle

3-133. A recovery vehicle may be stationed at a convenient intersection along the route or may remain on call in the DS maintenance unit. Recovery vehicles are the primary source of heavy-lift capability for removal and replacement of automotive power train assemblies in the field. Therefore, they should not accompany a road patrol unless the requirement for their services is known beforehand.

Refuel Points

3-134. DS-level maintenance support can be set up at refuel points along heavily traveled routes. This is a practical method of providing efficient, economical roadside maintenance service. Petroleum platoons can provide assets along roads for convoy refueling. These services can be extended to provide fuel to all vehicles using the route. A small maintenance element can also be located here. This element may consist of four to six automotive mechanics equipped with a vehicle and cargo trailer carrying small, easily replaceable repair parts and RX items.

3-135. While vehicles are being refueled, the maintenance element can assist the operator/crew in performing spot checks of the vehicle. Minor deficiencies can be corrected on the spot with available tools, repair parts, and BDAR techniques. Deficiencies that do not deadline the vehicle will be annotated on the DA Form 5988E. This form is given to the vehicle driver for action on return to the unit.

SECTION IV – STABILITY AND SUPPORT OPERATIONS

3-136. Section IV discusses maintenance during stability and support operations (SASO). SASO presents unique challenges to logisticians. Friendly CSS units are primary targets. Moreover, the constant presence of civilians in these areas of operation makes identification of threat elements very difficult. Defense against incidents such as boobytraps, sniping, theft, and partisan activities quickly reduces personnel and equipment resources. Recognizing operations inside and outside unit perimeters will be hazardous, logistics planners must prepare for and deliver timely maintenance support. Consult FMs 100-19 and 100-23. These manuals reflect operational doctrine prescribed by FM 100-5.

3-137. Divisional or nondivisional units may be deployed to provide maintenance support during peacekeeping, humanitarian, or disaster relief operations. They will probably be at least company size or larger. The type and density of customer equipment will largely determine the modular structure of subordinate maintenance companies. A maintenance company may be modularized as follows:

- One platoon to perform organizational maintenance for supported customers.
- One platoon to perform direct support maintenance.
- Sections and teams as needed to perform specific system support.

PEACEKEEPING

3-138. From a doctrinal standpoint, peace operations do not alter the way in which the Army performs maintenance. However, when planning maintenance support during peace operations, logisticians must consider the following factors:

- Hostile environment.
- Joint or multinational chain of command.
- Support to multinational forces.
- Risk assessment.
- Security of maintenance operations.
- Environmental impact.

3-139. Peacekeeping operations will most likely be accomplished as part of a multinational coalition. This presents new challenges for the maintenance commander, who could potentially support host nation military and commercial equipment. Also, there may be a requirement to support coalition force equipment. Beyond some of the special considerations noted here, much of the maintenance support for peacekeeping will not differ substantially from normal maintenance.

NOTE

FM 100-23 covers the full range of peace operations, including peacemaking, peacekeeping, peace enforcement, preventive diplomacy, and peace building.

HOSTILE ENVIRONMENT

3-140. National policy may require the Army, either singularly or as part of a joint or multinational task force, to conduct peace operations in politically sensitive areas of the world. At such times, regional combatants may disregard the peace initiative and continue a sporadic or repeated armed struggle. Commanders must anticipate this and be prepared to provide logistics support in hostile, potentially life-threatening situations.

LACK OF HOST NATION SUPPORT

3-141. Because friendly forces must operate in hazardous and politically sensitive areas, commanders should never assume availability of dedicated host nation support during peace operations. Instead, they must plan for maintenance support using organic resources.

MULTINATIONAL OPERATIONS

3-142. Because the Army frequently conducts peace operations with other nations, logistics commanders may encounter a multinational chain of command. In such cases, they must quickly establish communication channels to confirm or clarify mission requirements. Moreover, commanders must also determine how and from where they can expect timely resupply to perform their critical maintenance mission. Prompt coordination of mission and support requirements with higher headquarters ensures logistics planners deliver timely maintenance support to customer units.

3-143. Logistics commanders must anticipate support to all friendly forces. To accomplish that task, they must contact higher headquarters as well as known customer units to coordinate support requirements. At times, support to multinational forces may present unique logistical challenges. In such cases, logistics planners must take the initiative to determine customer equipment type and density.

RISK ASSESSMENT

3-144. When designated to provide maintenance support during peace operations, logistics commanders must carefully assess the risk threat to their organizations. Coordination with intelligence units and higher headquarters is a critical part of risk assessment. Based on equipment density and METT-TC, commanders identify potential security vulnerabilities and initiate appropriate courses of action. In some cases, a commander may require additional personnel and equipment resources to perform and sustain the mission.

SECURITY

3-145. Security is an important consideration for logisticians when planning maintenance operations during peacekeeping, humanitarian, or disaster relief operations. Security directly impacts the quality of support to customer units. When securing maintenance areas of operations, logisticians must do the following:

- Locate maintenance operations away from areas of dense population.
- Identify maintenance sites that units can easily secure and defend.
- Establish and secure lines of communication.
- Coordinate with engineer support for earthen barriers if required by the base cluster concept.
- Enclose maintenance operations areas with barrier material as part of the base cluster concept.
- Establish entrance and exit control points and procedures.
- Position crew-served weapons assets for maximum defensive firepower.
- Maintain responsive 24-hour perimeter security.

Unique Requirements

3-146. Sometimes METT-TC may not allow the security containment of an entire maintenance support unit. In such cases, logisticians consider security of only the most critical parts or nodes of the operation, using organic assets. When securing critical nodes, commanders initiate the following actions:

- Prioritize the criticality of each maintenance support mission.
- Assess organic resources and capability to secure individual missions.
- Request additional security resources from higher headquarters, if available.
- Designate available resources to secure highest priority missions first.

HUMANITARIAN OPERATIONS

3-147. As in peace operations, maintenance doctrine does not change during humanitarian operations. Nevertheless, humanitarian operations do introduce unique challenges to logisticians. Depending on the regional political situation, the Army may conduct humanitarian missions in either friendly or hostile environments.

3-148. Since humanitarian missions are conducted in either friendly or hostile environments, logistics planners must consider the situation and do the following:

- Locate maintenance operations away from dense population centers.
- Identify maintenance sites that units can easily secure and defend.
- Establish and secure lines of communication.
- Coordinate with engineer support for earthen barriers if required by the base cluster concept.
- Enclose maintenance operations areas with barrier materiel if required by the base cluster concept.
- Establish entrance and exit control points and procedures.
- Position crew-served weapons for maximum defensive firepower.
- Maintain responsive 24-hour perimeter security.

- Consider impact on the environment.

DISASTER RELIEF

3-149. During the summer of 1992, Hurricane Andrew devastated large areas of Florida. The ensuing calamity and distress placed the Army in a unique and significant support role.

3-150. In disaster relief operations, maintenance and logistics planners—

- Identify commercial vendors who can quickly supply the technical and repair parts support required.
- Organize assets from other agencies, contractors, and local maintenance resources for economy of effort.

3-151. Planners consider the impact on the environment, and they evaluate and prioritize repair of the following infrastructure equipment:

- Firefighting equipment.
- Medical equipment.
- Construction equipment.
- Generators.
- Organic equipment.
- Equipment belonging to other military elements involved in the operation.

3-152. The type of disaster provides the maintenance commander with some insight on whether to plan on availability of fixed facilities or to rely on maintenance under field conditions. The commander also considers how operations and facilities will conform with national, state, local, and host nation environmental laws. The type of disaster will dictate Class III and IX supply requirements.

SECTION V – ADVERSE ENVIRONMENTS

3-153. Section V addresses maintenance operations in desert, cold weather, jungle, mountain, and urban environments.

3-154. Regardless of the area of employment, key maintenance functions must be performed. FMs 9-207, 90-3, 90-5, 90-6, 90-10, and TB 43-0239 contain detailed discussions of operations in these environments

3-155. The first step in preparing for maintenance support operations is an analysis of the mission. Time, tools, skills, and repair parts (Class IX) are important to maintenance operations. A detailed analysis of the area of operations to identify lines of communications will play a major part in determining how maintenance support operations will be conducted.

3-156. In hostile environments, it is probable that lines of communications will be limited. Airfields, good roads, and railroads will be the exception rather then the rule. Airdrop of supplies and equipment is an effective alternative to air landing. Airdrop is a rapid means of delivery that makes deliveries to isolated units possible without further transshipping. Armor-infantry-mechanized (AIM) divisions have no organic airdrop support; they rely on corps units for airdrop support. Maintenance unit commanders must keep themselves informed at all times of user requirements and their own maintenance capabilities.

DESERT OPERATIONS

3-157. Maintenance support for desert operations requires an understanding of the environment. Temperatures vary according to latitude and season from over 136°F to the bitter cold of winter. In some deserts, day to night temperature fluctuation can exceed 70°F. Some species of animal and plant life have adapted successfully to desert conditions where annual rainfall may vary from zero to 10 inches. Desert terrain also varies from place to place; the common denominator is lack of water and little, if any, vegetation. This environment can profoundly affect military operations.

LOCATION

3-158. Desert locations are seldom close to normal lines of communication. The effects of the environment on equipment are severe, requiring increased levels of support to maintain a standard level of efficiency. Distances between units and lines of communication are long. Due to their importance, maintenance units are primary targets.

SECURITY

3-159. Enemy ambushes on MSRs are a threat in desert operations. Enemy patrols may lace nuisance mines on routes, especially at critical points. Certain actions can minimize the threat to supply routes:

- Patrol routes before immediate use and at irregular intervals when not in use. If the route is patrolled by surface vehicles, they must have maximum protection against mine blasts. MP patrols also provide a resource for continuous monitoring of supply routes.

- Locate observation posts so their surveillance equipment interlocks in poor visibility conditions. Observation posts can maintain a constant presence along the route but are relatively expensive in manpower.
- Schedule convoys at irregular intervals. Convoys may require armed escorts, as determined by the commander on the basis of METT-TC.

CLASS IX SUPPLY SUPPORT

3-160. Demand for Class IX supplies will increase due to environmental effects on equipment and the extra maintenance effort required. Small items with high-usage rates should be held as far forward as practical. Typical high-consumption items include—

- Filter elements.
- Tires.
- Water pumps, gaskets, fan belts, water hoses, and clamps.
- All parts for ignition systems.
- Wheel and sprocket nuts and wedge bolts.
- Spare caps for all liquid containers.
- Speedometers and cables (due to dead reckoning navigation, these are critical).
- Cleaning fluids for electronic equipment and windshields.

3-161. A unit's prescribed load list (PLL) depends on its equipment, but parts should be limited to only those items that prevent the equipment from performing if they failed. Larger, heavier items are carried by MSTs from the DS maintenance company. As demand varies from day to day, arrangements must be made for unexpected requirements to be moved to repair sites.

EFFECTS OF DESERT ENVIRONMENT ON EQUIPMENT

Terrain

3-162. Terrain varies from nearly flat with high traffic areas to lava beds and salt marshes with little or no traffic areas. Drivers must be trained to judge terrain in order to select the best method for conditions. Tracked vehicles are best suited for desert operations. Wheeled vehicles will go many places that tracked vehicles can go; however, their lower average speed on poor terrain may be unacceptable during some operations.

3-163. Vehicles should be equipped with spare fan belts, tires, and other items likely to malfunction, together with tow cables or chains (if not equipped with a winch), extra water cans, fuel cans, MREs, and desert camouflage nets. Air recognition panels, signal mirrors, and a tarpaulin (to provide shade for the crew) are very useful. Wheeled vehicles should also carry spurs, mats, or channels as appropriate to aid mobility.

3-164. The harsh environment requires a high standard of maintenance, which may have to be performed well away from specialized support personnel. Operators must be fully trained to operate and maintain their equipment. Some types of terrain can have a severe effect on suspension and transmission systems, especially those of wheeled vehicles. Items affected by mileage, such as wheels, steering assemblies, track wedge bolts and sprocket nuts, and transmission shafts, must be checked for undue wear when completing before-, during-, and after-operation maintenance checks.

Heat

3-165. Vehicle cooling and lubrication systems are interdependent; a malfunction by one rapidly places the other under severe strain. All types of engines may overheat to some degree, leading to excessive wear and, ultimately, to leaking oil seals in the power packs.

3-166. Commanders should be aware of which vehicle types are prone to overheating and ensure that extra maintenance is given them. Check oil levels frequently (a too high level may be as bad as a too low level) and check seals for leaking. Keep radiators and airflow areas around engines clean and free of debris and other obstructions. Water-cooled engines should be fitted with condensers to avoid waste of steam through the overflow pipe. Cooling hoses must be kept tight (one drip per second amounts to seven gallons in 24 hours). Operators should not remove hood side panels from engine compartments while the engine is running; this causes turbulence, leading to ineffective cooling.

3-167. Batteries do not hold their charge efficiently in intense heat. Battery-specific gravity must be changed to adjust to this environment. The unit can either adjust the electrolyte to 1.200 or 1.225 specific gravity or obtain sulfuric acid with a specific gravity of 1.2085 to 1.2185. Air vents must be kept clean or vapors may build up pressure and cause the battery to explode. Voltage regulators should be set as low as practical. Stocks of dry batteries must be increased to offset the high attrition rates caused by heat exposure.

3-168. Severe heat increases pressure in closed, pressurized systems and increases the volume of liquids. Care must be exercised to ensure that working pressure of all equipment is within safety limits. Caution must be exercised when removing items such as filler caps. Some items of equipment are fitted with thermal cutouts that open circuit breakers when equipment begins to overheat. Overheating can be partly avoided by keeping the item in the shade and wrapping it in a wet cloth to maintain a lower temperature by evaporation. Wood shrinks in a high-temperature, low-humidity environment. Equipment such as axes carried on tracked vehicles can become safety hazards as heads are likely to fly off as handles shrink.

3-169. Keep ammunition away from direct heat and sunlight. If it can be held by bare hands, it is safe to fire. White phosphorous ammunition filler tends to liquefy at temperatures over 111°F, which will cause unstable flight unless projectiles are stored in an upright position.

Radiant Light

3-170. Radiant light or its heat effect may be detrimental to plastics, lubricants, pressurized gases, some chemicals, and infrared tracking and guidance systems. Items like CO^2 fire extinguishers, M13 decontamination and reimpregnating kits, and Stinger missiles must be kept out of constant direct sunlight. Because optics may discolor in direct sunlight, limit their exposure to the sun's rays.

Dust and Sand

3-171. Dust and sand are probably the greatest dangers to efficient functioning of equipment in the desert. Lubrication must be the correct viscosity for the temperature; it must be kept to the absolute minimum in

the case of exposed or semiexposed moving parts. Sand mixed with oil forms an abrasive paste. Lube fittings, which are critical items, should be checked frequently. Teflon bearings require constant inspection to ensure that the coating is not being removed. Engine maintenance is critical due to the strong possibility of sand or dust entering cylinders or moving parts when the equipment is stripped. Screens against flying sand are essential; they also provide shade for mechanics.

3-172. Examine and clean air cleaners on all equipment at frequent intervals. The exact interval depends on operating conditions but should be at least daily. Use filters when refueling all vehicles, and keep the gap between the nozzle and the fuel tank filler covered. Fuel filters require frequent cleaning; oil filters require replacement more often. Engine oils require changing more often than in temperate climates. Windblown sand and grit will damage electrical wire insulation over time. All cables that are likely to be damaged should be protected with tape before insulation becomes worn.

3-173. Sand will also find its way into parts of items like spaghetti cord plugs, either preventing electrical contact or making it impossible to join the plugs together. A brush (an old toothbrush, for example) should be carried and used to brush out such items before they are joined.

3-174. Dust affects communication equipment such as amplitude-modulated radio frequency (AM RF) amplifiers and radio-teletypewriter sets. The latter, especially, are prone to damage due to their oil lubrication, so dust covers should be used whenever possible. Some receiver-transmitters have ventilating parts and channels that can get clogged with dust. Check them regularly and keep them clean to prevent overheating.

3-175. Weapons may become clogged or missiles jammed on launching rails due to sand and dust accumulation. Sand- or dust-clogged barrels can lead to in-bore detonation. Keep muzzles covered by a thin cover so an explosive projectile can be fired through the cover without risk of explosion.

3-176. Missiles on launchers must also be covered until used. Working parts of weapons must have minimum lubrication. It may even be preferable for them to be totally dry, as any damage caused during firing will be less than that produced by the sand-oil abrasive paste.

3-177. All optics are affected by blowing sand, which gradually degrades their performance due to small pitting and scratches. It is necessary to guard against buildup of dust on optics that may not be apparent until low-light optical performance has severely deteriorated. It may be advisable to keep optics covered with some form of cling film until operations begin, especially if the unit is near a sandstorm. Store optics in a dehydrated condition using hydroscopic material. Those in use should be kept where free air can circulate around them and be purged at frequent intervals.

3-178. Sand and dirt can accumulate in hull bottoms of armored vehicles and, when combined with condensation or oil, can cause jamming of control linkages. Sand accumulation in the air bleeder valve can inhibit heat from escaping the transmission and result in damage.

Temperature Variations

3-179. In deserts with relatively high dew levels and high humidity, overnight condensation can occur wherever surfaces are cooler than the air temperature (such as metal exposed to air). This condensation can affect optics, fuel lines, and air tanks. Fuel lines should be drained night and morning; optics must be cleaned frequently. Weapons—even if not lubricated—will accumulate sand and dirt due to condensation, another reason for daily cleaning.

3-180. Air and fluids expand and contract according to temperature. Tires inflated to correct pressure during the night may burst during the day. Fuel tanks filled to the brim at night will overflow as temperatures rise. Check air pressure when equipment is operating at efficient working temperature and fill fuel tanks to their correct capacity as defined in the appropriate technical manual.

Static Electricity

3-181. Static electricity is common in the desert, caused by atmospheric conditions coupled with an inability to ground out due to dry terrain. It is particularly likely with aircraft or vehicles having no conductor contact with the soil. The difference in electrical potential between separate materials may cause a spark on contact; if present, flammable gases may explode or cause a fire. A grounding circuit must be established between fuel tankers and vehicles being refueled, it must be maintained before and during refueling, and both tankers and vehicles must be grounded.

Winds

3-182. The velocity of desert winds can be destructive to large, relatively light material, such as aircraft, tentage, and antenna systems. To minimize wind damage, materiel should be given terrain protection and firmly picketed to the ground.

MAINTENANCE SUPPORT

3-183. Following are general guidelines for desert repair of equipment:

- Repair only what is necessary to make the equipment combat-ready.
- Recover the equipment to the nearest reasonably secure site, followed by on-site repair.

Establish a recovery and maintenance SOP before or immediately after arrival in theater. The SOP should include—

- Crew-level recovery and expedient repair.
- Unit-level maintenance recovery.
- DS-level maintenance recovery.
- Recovery priorities by vehicle types.
- Limitations of field expedient recovery techniques (for example, the distance/time that one tank is allowed to tow another considering the heat buildup in transmissions in this environment).
- Security and guides for recovery teams.

3-184. The recovery plan should include locations of maintenance collection points for equipment that cannot be repaired forward. These points must be

located where they can be reached by HETs, which may require the recovery vehicle to perform a longer than normal tow.

3-185. The maintenance collection point should cover a large area to allow for dispersion of supporting unit's equipment and inoperable weapon systems. An MST from the forward maintenance unit will normally be located at the maintenance collection point to determine disposition of inoperable equipment. Equipment authorized for disposal may be used for controlled exchange to support the repair of like vehicles. When considering recovery in the desert, pay special attention to ground-anchoring equipment since natural anchoring material is scarce.

COLD WEATHER OPERATIONS

3-186. One of the major problems for units operating in cold weather conditions is the lack of personnel with adequate training in cold weather operations and maintenance support. If troops stationed in warm climates must move to cold climates to perform their mission, cold weather training is of utmost importance. Much time and energy in cold weather areas are expended in self-preservation, which reduces personnel efficiency in operating and maintaining materiel. Maintenance personnel must learn how to live and work in cold regions.

LOCATIONS

3-187. Operation of materiel in temperatures down to -10°F presents few problems. Conditions are similar to those in the northern portions of CONUS during the winter. From -10°F to -40°F, operations become difficult.

3-188. Proper training will prevent failures of materiel and injuries to operating personnel. When the temperature is below -40°F, operations become increasingly difficult. At temperatures near -65°F, the maximum efforts of well-trained personnel are required to perform even a simple task with completely winterized materiel. Figure 3-3 shows the levels of increasing difficulty as temperatures drop.

SECURITY

3-189. Enemy ambushes are always a threat in snow-covered terrain. Since units must furnish their own security, reconnaissance, and surveillance, camouflage is a basic tool used to defeat detection by the enemy. In the absence of issued camouflage uniforms, soldiers can improvise camouflage suits, adapting color and pattern to the terrain background.

3-190. A white garment designed to blend with a white or mottled white and black background is used in snow-covered terrain. This snowsuit does not conceal small patches of shadow that surround a human figure, but this is not necessary since snow country usually contains numerous dark spots and shadows. If certain snow areas are all white with absolutely no shadows, make use of defiles and natural folds in the ground.

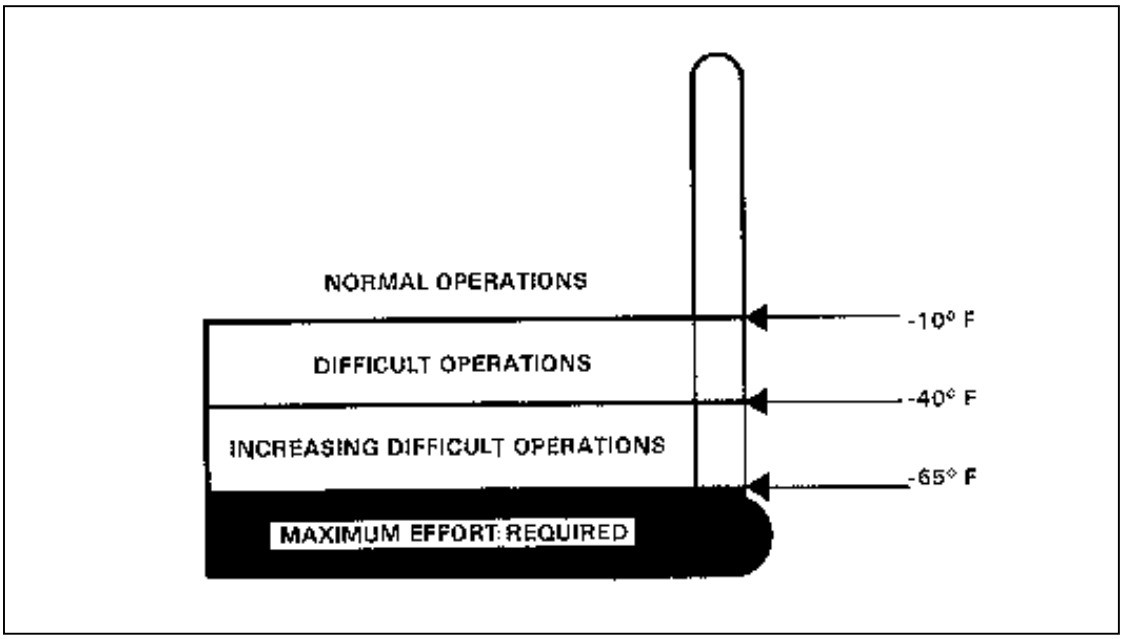

Figure 3-3. Cold Weather Operations—Levels of Difficulty

CLASS IX SUPPLY SUPPORT

3-191. The effect of cold weather on Class IX supply support makes handling and storage of materials of prime importance. Supplies are delivered as far forward as weather, terrain, and the tactical situation permit. However, supply-handling requirements will vary significantly from those encountered in temperate climates:

- Metals become brittle at extremely low temperatures; parts cannot withstand the shock loads that they sustain at higher temperatures.
- Extreme care is required when handling rubber-covered cables at low temperatures. If rubber jackets become hard, cables must be protected from shock loads and bending to prevent short circuits caused by breaks in the covering. Neoprene jackets on cables become very brittle and break readily at low temperatures.
- Tires become rigid when cold, causing flat spots on portions that come into contact with the ground during shutdown periods. At extreme low temperatures, side walls become brittle and crack.
- Plastics expand and contract much more than metal or glass. Any parts or materials made of plastic must be handled carefully.
- Glass, porcelain, and other ceramics should perform normally at low temperatures if handled carefully. Cracking may result if heat is applied directly to cold windshields or vehicle glass.
- Fabrics retain their flexibility even at extremely low temperatures provided they are kept dry.

MAINTENANCE

3-192. Personnel must be aware of the importance of maintenance, especially PMCS. Maintenance of mechanical equipment is exceptionally difficult during cold weather. Automotive and other mechanical maintenance cannot be completed with normal speed because equipment must be allowed to warm up before maintenance personnel can make repairs. Routine tasks require additional time. The time lag, which cannot be overemphasized, must be included in all planning. Personnel efficiency is reduced by bulky clothing, which must be worn at all times

3-193. The resulting loss of the sense of touch further reduces efficiency. Even the most routine operations like handling latches or opening engine enclosures become frustrating and time-consuming with gloves. At temperatures below -20°F, maintenance requires up to five times the normal time. Complete winterization, diligent maintenance, and well-trained crews are the keys to efficient cold weather operations.

3-194. The following requirements affecting maintenance planning and preparation should be complied with before beginning a cold weather operation:

- Shelter for materiel requiring maintenance.
- Proper clothing and tools for maintenance personnel.
- Ground cover (plywood or canvas) for personnel to lie on under vehicles.
- Adequate portable heaters.
- Suitable methods to store and issue antifreeze materials, fuels, hydraulic fluids, and lubricants.
- Sufficient lighting equipment.
- Supply of repair parts for equipment.
- Sufficient equipment for removal of snow and ice.

WARNING

Provide proper ventilation to avoid the danger of carbon monoxide poisoning caused by operation of engines or from contaminated hot air from defective heaters.

Do not use heaters that produce contaminated hot air in buildings or maintenance tents where personnel are present.

BUILDINGS AND SHELTERS

3-195. Heated buildings or shelters are needed for cold weather maintenance operations. Maintenance of many components requires careful, precise servicing. Without heaters, the increase in maintenance man-hours will be from 25 to 500 percent above normal requirements. When buildings are not available, maintenance tents are used as a temporary expedient. When possible, wooden flooring should be laid inside all tents. Tents should be heated by portable duct heaters or tent stoves.

3-196. In the absence of buildings or maintenance tents, tarpaulins may be used as a field expedient to create overhead shelter and wind breaks. The tarpaulin can be supported on a framework of poles erected around the vehicle. Parachutes can also serve as temporary shelters. The parachute should be deployed over the vehicle, securely staked down at the bottom, and then inflated with air from a portable duct heater. If parachute shelters are used, extreme care should be taken to avoid carbon monoxide poisoning.

WARNING

Fill fuel tanks/containers of vehicles, generators, and POL containers brought into warm storage from the cold no more than three-quarters full. Failure to follow this procedure results in expansion of the cold POL products in the fuel containers, which could cause spillage and a serious fire hazard.

Be constantly on the alert to detect vehicle deficiencies that expose personnel to carbon monoxide poisoning. Inspect and test passenger and crew compartments of wheeled and tracked carriers at regular intervals to detect any signs of air contamination from exhaust gases due to leaking gaskets, improper exhaust installation, cracked exhaust pipes, defective personnel heaters, or auxiliary generators.

LIGHTING EQUIPMENT

3-197. Sufficient equipment must be available to furnish lights during maintenance operations. Lights with ample cable extensions, attachment plugs, connectors, and spare bulbs are essential.

MAINTENANCE PERSONNEL, TOOLS, AND EQUIPMENT

3-198. An increase in the number of mechanics will be required to maintain equipment in cold weather operations. As a minimum, a highly organized, more intensive effort is required of personnel on hand. Remember that the amount of work performed under cold conditions is considerably less than work accomplished in moderate temperatures.

3-199. An additional supply of battery chargers must be available to meet the heavy requirements for battery maintenance in subzero temperatures. Hydrometers and testers must be on hand to check the state of charge of batteries. Tools provided in the various tool kits are adequate for maintenance at subzero temperatures.

3-200. Gloves worn while performing maintenance on fuel systems and lubrication of cooling systems may become saturated with fluids. This reduces the insulating value of the gloves and may result in cold injury to personnel. Maintenance personnel should carry extra gloves.

3-201. Personnel should avoid leaning on cold soaked equipment or kneeling or lying on the ground. Rapid body cooling caused by heat transfer to the equipment or ground may result in cold injury. Some sort of insulation,

such as fiber packing material, corrugated cardboard, rags, or tarpaulins, should be placed between the mechanic/repairer and the equipment.

3-202. When performing maintenance under arctic winter conditions, a box or a pan should be used to hold small parts. A tarpaulin should be placed under the vehicle to catch parts that may be dropped to prevent them from being lost in the snow. See FM 9-207 for more information.

JUNGLE OPERATIONS

3-203. Maintenance units in a jungle environment retain the same basic mission and capabilities as in other environments. However, they must make adjustments due to terrain, weather, and vegetation.

LOCATION

3-204. Jungle operations subject personnel and equipment to effects not found in other environments. Traffic areas and security problems often affect maintenance units as much as maneuver forces. The lack of an extensive all-weather transportation network in many jungle areas makes the mission of support units more difficult. Transportation difficulties may dictate that maneuver units be resupplied by air, pack animals, or human portage.

SECURITY

3-205. Ambushes and infiltration characterize jungle combat operations. The security threat caused by infiltrators requires that lines of communication be patrolled frequently and that convoys be escorted. Therefore, maintenance support must be performed as far forward as the tactical situation permits. This improves response time, reduces road movement, and allows maintenance units to take advantage of the security offered by combat units.

CLASS IX SUPPLY SUPPORT

3-206. Repair parts that deteriorate or wear out faster in the jungle environment must be identified. The PLL must reflect the increased turnover of these parts.

MAINTENANCE

3-207. Maintenance units in the jungle function essentially the same as in other operations. High humidity and temperatures in jungle areas increase maintenance requirements. Preventive maintenance checks and services (PMCS) on any items affected by moisture and heat is extremely important. Emphasis must be placed on on-site maintenance and the use of aircraft to transport MSTs and repair parts to the supported unit. The need for responsive maintenance support means the number of repair parts for immediate use must be increased.

TRANSPORTATION

3-208. Maintenance units should consider the employment of all types of transportation. Surface transportation facilities are poor in most jungle areas; they cannot handle heavy military traffic without extensive improvements. An air line of communication can eliminate many of the problems associated with surface movement. Human portage is a basic

means of moving supplies and equipment in jungle operations, a method that, at best, is slow, laborious, and inefficient.

3-209. Wheeled vehicles are normally restricted to roads and wider trails, and even these may prove impassable during heavy rains. Sometimes repair parts must be transported by transloading from wheeled to tracked vehicles. For example, large wheeled vehicles move supplies as far forward as possible, where they are transloaded to tracked vehicles. Then tracked vehicles move them cross-country. In rugged terrain, supplies may require further transloading to pack animals or native supply bearers.

3-210. Fixed-wing transport aircraft can usually operate at greater distances without refueling than cargo helicopters. However, use of fixed-wing aircraft to land supplies requires more landing strips than may be present. Construction and maintenance of airfields in jungles are difficult engineering tasks, but a savanna may be large and firm enough to use as an airstrip.

3-211. Airdrop of supplies is an alternative to air landing. Airdrop makes deliveries to isolated units possible without further transloading. Disadvantages include the dispersion of supplies and the possibility of lost cargo under the jungle canopy, vulnerability to local enemy air defense, and requirements for at least local friendly air superiority.

MOUNTAIN OPERATIONS

3-212. Historically, the focal point of mountain operations has been the battle to control the heights. Changes in weaponry and equipment have not altered this fact. In all but the most extreme terrain and weather, infantry, with its light equipment and mobility, remains the basic maneuver force in the mountains. With proper equipment and training, infantry is ideally suited for fighting the close-in battle commonly associated with mountain warfare. Mechanized infantry can also enter the mountain battle, but it must be prepared to dismount and conduct operations on foot. Because of the severity of the environment, maintenance support in mountainous areas can be somewhat difficult.

LOCATION

3-213. Due to terrain constraints, it may be necessary to disperse support units over a wide area. Dispersion reduces the vulnerability of maintenance units; however, it may cause problems with command, control, and local security. Because maintenance units will be high-priority targets, they must have adequate protection against ground and air attack to ensure continuous operations. In all cases, maintenance units must locate as far forward as possible.

SECURITY

3-214. Mountains provide excellent opportunities for ambush and attacks on vehicle traffic on MSRs. Enemy units can be airdropped or air-landed on key terrain that dominates supply routes. Maintenance units must be alert for enemy infiltration detachments that may seize important road junctions to isolate combat units from maintenance support. Route patrols and observation posts are required to secure MSRs.

CLASS IX SUPPLY SUPPORT

3-215. In mountain operations, rugged terrain and climatic extremes cause repair parts consumption to increase. Movement of repair parts should be expedited into and within the combat area. Parts with high usage rates should be stocked on the authorized stockage list (ASL) at both the MSB and FSB. Typical high-consumption repair parts include—

- Tires.
- Tie rods.
- Transmissions.
- Brake shoes.
- Tracks and pads.
- Final drives.
- Winch parts.

3-216. Isolated operations require an increased repair parts stockage in each category; however, ASLs should contain only those repair parts that are combat-essential and demand-supported for a particular piece of equipment.

MAINTENANCE

3-217. Fixing equipment as far forward as possible is extremely important in mountain operations. Vehicle crews and maintenance personnel must be trained to evaluate damage to their equipment accurately. Repair should be accomplished by maintenance teams from the organizational maintenance element of the supported unit or by MSTs from the DS maintenance company. Recovery of equipment will be very difficult. When recovery is required, equipment should be moved only as far rearward as the point where repairs can be made, frequently the combat trains area.

TRANSPORTATION

3-218. Although vehicles are used to move a large share of repair parts forward, they are not always able to reach deployed units. Locally obtained animals or individual soldiers must often move repair parts from roads to unit positions. Whenever possible, use vehicles to move heavy, bulky items or repair parts.

3-219. When weather permits, use helicopters to move repair parts from the supply support activity directly to forward units. Helicopters speed resupply operations and reduce multiple handling. Helicopters are good for emergency resupply and movement of high-priority supplies; they should be used whenever possible. Resupply by US Air Force aircraft is another option.

URBAN TERRAIN

3-220. The urban battlefield does not cause significant changes in maintenance doctrine or organizations. However, it does impact on how maintenance is provided. Urban regions normally contain a well-developed distribution system, major portions of which are highways, rail lines, airfields, manufacturing plants, and storage areas.

3-221. Built-up areas frequently provide suitable locations for deployment of maintenance units. Such areas offer excellent cover and concealment and

may contain easily adaptable maintenance and storage facilities. At the same time, rubble or damaged built-up areas may present obstacles along lines of communication, which are vital to effective functioning of maintenance units.

LOCATION

3-222. Because of the tactical situation, maintenance units may support from a built-up area. When using built-up areas, protection and physical security become important considerations. Supplies and equipment must be protected from both enemy attack and theft. Refugees may seriously impede or block movement over routes required by MSTs or movement of equipment to MCPs. Maintenance units may take advantage of hard stands, overhead lift, installed communication systems, and maintenance facilities existing in their areas of responsibility.

SECURITY

3-223. Buildings provide excellent locations for snipers and thieves to use to attack maintenance units. Maintenance units must be alert for enemy infiltration detachments that may move among the civilian population. Maintenance shop areas should be blocked off with patrols and observation posts, as required to secure the area.

CLASS IX SUPPLY SUPPORT

3-224. In urban terrain operations, vehicle repair parts usage may decrease as units dismount. Consumption of repair parts for small arms and engineer equipment may subsequently rise. Concentrated operations allow centralized control of repair parts in urban operations. MSTs may operate on site with the supported unit or from the base company location.

MAINTENANCE

3-225. Fixing equipment on site is extremely important in urban operations. Organizational maintenance personnel must be trained to evaluate damage to their equipment accurately. Recovery of equipment will prove very difficult. When recovery is required, equipment should be moved only as far rearward as the point where repairs can be made. When selecting the maintenance site, consider—

- Security.
- A sufficient area around equipment for lift or recovery vehicles to operate in.
- Use of a nearby maintenance facility or garage.

TRANSPORTATION

3-226. Although wheeled vehicles are used to move many repair parts forward, they are not always able to reach the unserviceable equipment due to rubble and blocked roads. Tracked vehicles can often move repair parts forward over the obstruction. Individuals and soldiers must often move repair parts from clear areas to equipment locations.

Chapter 4

Maintenance Management

Chapter 4 describes maintenance management procedures for various types of maintenance operations.

SECTION I - PROCESS AND RESOURCES

4-1. Broad principles of maintenance that provide the framework for operating a maintenance shop are found in AR 750-1. Those that apply to maintenance support follow:

- Commanders are responsible for establishing a command climate that ensures all assigned equipment is maintained according to appropriate technical manuals and AR 750-1.
- Commanders are responsible for providing resources, assigning responsibility, and training their soldiers to achieve the desired standard.
- The MAC is the primary tool used to determine the degree of maintenance and to specify the tasks to be performed at each level.
- The decision to repair or evacuate is based on the maintenance recovery code (MRC) and the recovery code (RC), the urgency of need, and METT-TC.
- Unserviceable reparables beyond the MAC's authorization to repair must be evacuated promptly to the appropriate maintenance activity for repair.

PROCESS

4-2. The maintenance management process includes—

- Forecasting.
- Scheduling.
- Production control.
- Quality assurance.
- Technical assistance.
- Provisioning of repair parts.
- Workloading/cross-leveling regional workload.
- Developing reparable programs to meet local, regional, and national needs.

4-3. Inherent in the maintenance management responsibility is the obligation to provide a safe environment while conducting maintenance operations. Maintenance management is as important during field or combat operations as it is for garrison maintenance missions. Safety concerns must be addressed in the SOP and operations orders.

4-4. Maintenance management policies and procedures are contained in the Maintenance Management UPDATE, which includes AR 750-1 and DA Pamphlets 738-750 and 750-35. Divisional and nondivisional units utilize the SAMS to collect maintenance data and provide management information to each level of command. Repair parts management policies and procedures for both using unit and DS maintenance units are found in the Unit Supply UPDATE.

SUSTAINMENT MAINTENANCE

4-5. Sustainment maintenance structures and operations are based on requirements generated by ASCC and TAACOM. Sustainment maintenance leadership will—

- Provide sustainment functional training to TAACOM maintenance/supply directorates and area support groups.
- Assist ASCC/TAACOM managers concerning sustainment maintenance issues to optimize capabilities.
- Assist in planning and updating theater-focused maintenance support plans to capitalize on fixed-base and mobile maintenance capabilities, including review of RC GS-level maintenance MOS proficiencies to support assigned missions.

4-6. The sustainment information management systems will—

- Include connectivity with current maintenance and supply STAMIS (SAMS/SARSS/ABF, etc).
- Recommend preassigned maintenance support RIC instruction to TMMC/CMMC for in-theater and strategic base (CONUS/OCONUS) ISM operations.
- Monitor worldwide component availability for items identified as ASCC/TAACOM core weapon systems and critical equipment components (Classes VII and IX).

- Maintain visibility over repair part availability, identifying potential line-stopper parts for critical items that support the repair of components of major and secondary items.
- Assist in maintenance retrograde and redeployment phases of the operation.

Figure 4-1 lays out the sustainment maintenance support structure from the sustainment base to the corps rear.

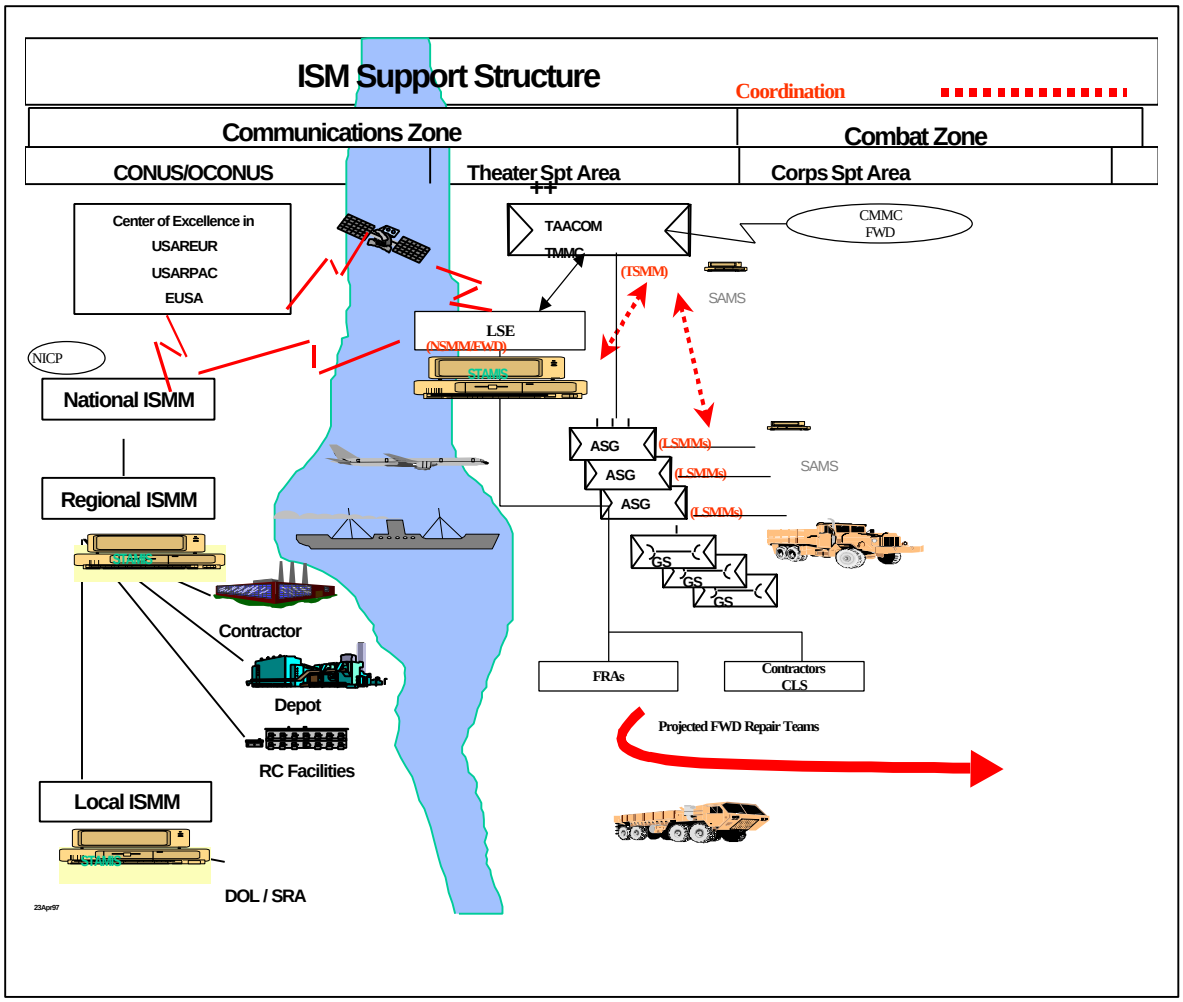

Figure 4-1. Layout of Sustainment Maintenance Support Structure

READINESS AND SUSTAINMENT MAINTENANCE MANAGERS

4-7. The various management functions required resulted in classification of maintenance management into two echelons—readiness and sustainment. Commanders are responsible for equipment readiness. Readiness maintenance managers at corps and lower echelons support commanders by managing operations to enhance equipment readiness. Readiness maintenance managers maximize

combat readiness by coordinating repairs as far forward as possible for quick return to battle. Readiness maintenance managers assigned to support battalions support brigade-size units.

4-8. Sustainment maintenance managers integrate sustainment maintenance (minus medical) for the total Army. They recommend support structure to the CINC and implement policies and procedures that provide optimal sustainment maintenance support to the full spectrum of total Army missions. This is a seamless process transparent to the user. They participate in development and integration of the LSE.

National Sustainment Maintenance Manager

4-9. The NSMM—

- Serves as principal agent for developing, coordinating, and integrating the sustainment maintenance (SM) relations portions of contingency SASO plans.
- Provides a sustainment maintenance support structure as part of the LSE to support the theater.
- Provides oversight of total Army SM capabilities and capacities.
- Recommends changes in infrastructure, facility upgrades, realignments, and modernization; recommends consolidation of SM capability to maximize efficiency.
- Rounds out RC GS maintenance unit (GSMU) technical training requirements with existing resources; assists in development of training plans to enhance SM skills.
- Develops, integrates, and standardizes SM procedures, policies, and operations.
- Coordinates and provides input to materiel developers and commodity managers in the integrated logistics support (ILS) process as it relates to SM support resources.
- Works with combat developers to revise input to materiel developers in identifying special tools and TMDE requirements for new weapon systems.
- Works with combat developers in articulating SM aspects and requirements for standard and emerging logistics management information system integration, including financial system interface.
- Provides recommendation to regional and national level agencies on how best to achieve SM objectives by consolidating regional and national requirements.
- Identifies nonexecutable SM requirements and recommends resolution.
- Monitors and tracks SM cost, production, and performance data; recommends improvements on day-to-day and future operations.
- Assists regional and national agencies in resolving line stoppers, non-mission-capable equipment, and quality deficiency reports.
- Monitors and realigns/balances regional workload by cross leveling between regional and national agencies.

- Provides continuity mechanism for backfill of regional and local management functions during mobilization, contingencies, deployments, and SASO situations.

Regional Sustainment Maintenance Manager

4-10. The RSMM, located at a designated geographical area, has the authority to prioritize and redirect workload among the LSMMs. Depending on the extent of support required, an RSMM operation may be established in an overseas theater of operation as part of LSE support. The RSMM—

- Tailors reparable programs submitted by LSMMs to meet regional demands and training requirements, weapon system availability, and cost avoidance.
- Determines regional normal and surge capability and capacity.
- Determines COE selections.
- Receives national-level requirements, performs capacity and capability assessments, bids on national workload, and submits program status reports.
- Performs cost analysis assessments.
- Identifies work that cannot be accomplished within the region and elevates it to the national sustainment maintenance manager.
- Plans for sustainment maintenance support for mobilization and deployments.
- Interfaces with LSMMs, the NSMM, field commanders, and staff.

Local Sustainment Maintenance Manager

4-11. The LSMM workloads all sustainment maintenance units and activities in a designated geographic area, which could be at multiple maintenance centers. There may be situations where an LSMM operation is established in an overseas theater of operation as part of LSE support. The LSMM—

- Develops reparable programs to meet local demands.
- Conducts work center capability and capacity assessments.
- Prepares bids and competes for COE selection for the region as well as for national work.
- Performs exception management.
- Identifies work that cannot be accomplished within the local geographical region and elevates it to the RSMM.
- Conducts cost analysis.
- Interfaces with customers, other LSMMs, and the RSMM.
- Plans for mobilization, deployments, and SASO.
- Plans for capacity and capability modernization.

4-12. Sustainment maintenance managers at corps and above focus on materiel management. They focus on fixing by repair, sustaining units, and supporting joint/multinational equipment and standard Army systems. Sustainment maintenance managers are assigned to theater and DA support commands. Managers use their maintenance knowledge and experience, along with aid from their management interfaces and CSS computers, to determine potential and developing problems and to

facilitate avoidance or resolution. Figure 4-2 illustrates how sustainment managers interface.

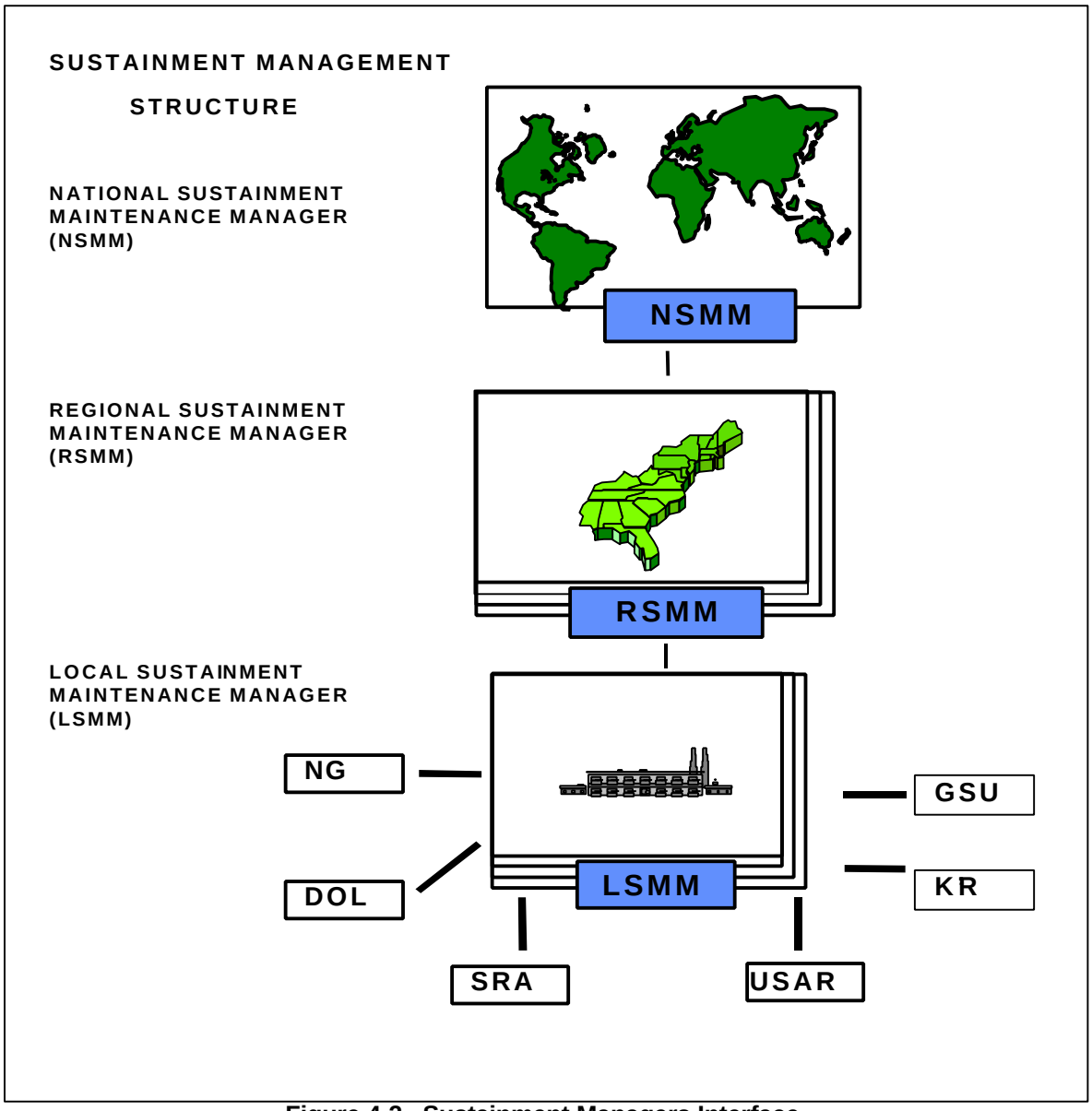

Figure 4-2. Sustainment Managers Interface

MATERIEL MANAGEMENT CENTER

4-13. The MMC is the maintenance manager for deployed Army forces. It is the link between the deployed forces and the support base. The MMC maintains a close working relationship with the LSE. Theater-level GS maintenance companies may come under the LSE for workloading. Also, the MMC may support equipment of other services or multinational forces.

RESOURCES

4-14. Resources are the tangible and intangible assets needed to accomplish the mission. They include—

- People.
- Tools.
- Test equipment.
- Repair parts.
- Publications.
- Facilities.
- Time.
- Skills.
- Funds.

Maintenance managers' objectives are to maintain readiness at the optimal level with the least expenditure of resources. Managers must decide what resources are needed to support specific mission requirements and advise the commander on the logistic impact of various courses of action.

4-15. Maintenance management deals with various factors affecting a unit's mission:

- Command emphasis.
- Day-to-day management skills.
- Supervision.
- Motivation.
- Technical skills.

Managers use these tools to channel maintenance efforts. Failure to achieve wanted results often stems from failure in one or more of these areas.

COMMAND EMPHASIS

4-16. The commander sets the tone for what is important within the command. The personal example of leaders shows their concern for specific aspects of the unit's mission. This concern is translated into action by the soldiers in the command. To place command emphasis on maintenance operations, the commander shows an active interest in these operations and in the materiel readiness of unit equipment. Maintenance managers use command emphasis to influence the support mission even though they may not be in the chain of command. Commanders need to balance mission, training, and administrative requirements to form a cohesive unit.

MANAGEMENT SKILLS

4-17. Maintenance managers strive continuously to improve their operations. Since the management process itself plays a key role in maintenance operations, managers should always look for ways to improve planning, organizing, coordinating, directing, and controlling. Managers must also look for ways to be proactive (influencing events

before they happen) rather than reactive (reacting to events as they happen). Feedback and after-action reports are also vital tools used by maintenance managers.

4-18. Under the stress of day-to-day operations, these elements may lose visibility and may not seem to have a direct bearing on materiel readiness. However, small improvements in the total system bring greater overall benefits than a heroic effort directed toward one or two items. The maintenance manager must be extremely careful that changes to maintenance operations do not undermine other initiatives established by the commander.

SUPERVISION

4-19. First-line supervisors are a vital link in the chain of command. The commander depends on them to accomplish the day-to-day mission and to ensure the welfare of the troops. First-line supervisors receive instructions and turn them into tangible results. Passing along the commander's requirements is only a small part of their responsibilities. Their major challenge lies in ensuring that the people they supervise accomplish the mission. First-line supervisors are the individual soldier's primary source of assistance and further professional development. They need to know the standards and objectives set by the chain of command in order to direct their soldiers' efforts.

4-20. First-line supervisors must be aware of mission requirements and the capabilities and limitations of the soldiers under their control. They must continuously train their subordinates to support the needs of the battlefield. Next to the mission, the welfare of soldiers and their professional development are paramount in the supervisor's mind.

MOTIVATION

4-21. Motivation is the need instilled in an individual to perform designated tasks. The leadership demonstrated by commanders and supervisors greatly influences motivation of soldiers. Effective leadership is the key to motivation. Effective leaders define objectives, communicate them, evaluate how well they are achieved, and provide feedback to soldiers doing the work. Maintenance managers often underestimate the importance of this process. Most soldiers want to perform well, but they must know the objectives and standards and receive performance feedback. Superior achievement must be recognized and substandard performance must be corrected.

TECHNICAL SKILLS

4-22. Technical skills are the ability to perform tasks associated with duty positions. Training provides these skills. A soldier's skills are one of the commander's most important assets. When the battle begins, there will be little time for training. The commander must always strive for high levels of training. The Army training system depends on the unit commander's continuing the training process begun during advanced individual training. Many training resources are available. The commander and the maintenance manager must use these resources to

maximum advantage. To a maintenance company commander, training on technical tasks is as important as training on tactical skills. Mission training plans (MTPs) and soldier training publications establish the requirements for technical maintenance training.

SECTION II - LEVELS OF MANAGEMENT

4-23. Section II discusses maintenance management roles at the various levels. Maintenance operations must have careful direction, supervision, and management. These functions are accomplished at the company and higher headquarters levels. The higher headquarters elements concerned with maintenance operations are the MMC for the command and the support operations office for the battalion. The chain of command and other supporting units provide technical assistance on request. Close coordination with the MMC and the battalion's support operations office is essential. The MMC and the battalions must work together and have a thorough understanding of the capabilities and limitations of each.

4-24. Unprogrammed requirements have a significant impact on the maintenance mission. The MMC and the support operations office must identify known requirements in advance. Commanders and supervisors seek out information, predict future requirements, and assess requirements for their impact.

MATERIEL MANAGEMENT CENTER

4-25. The MMC mission—

- Is the central data collection and analysis element for all maintenance activities belonging to the command.
- Has responsibility for gathering, maintaining, analyzing, and acting on information in maintenance management information systems.
- Establishes procedures for gathering data and distributing the resulting information to subordinate units and commanders as required.
- Provides technical direction and control of battalion operations for the higher headquarters.
- Provides guidance and day-to-day planning for integrated maintenance and supply management.
- Disseminates information, instructions, and directions through battalion headquarters.
- Controls attachment of augmentation MSTs to tailor support to match the requirements of the supported force. The support group headquarters performs administrative support and exercises command and operational control functions (except for technical direction of maintenance support operations).

4-26. A principal function of the MMC is to advise the command and staff on significant trends and deviations from established standards and to recommend necessary actions.

CAPABILITIES

4-27. The MMC provides most instructions and directives to the maintenance or support battalion relative to disposition of end items or components requiring evacuation. It sets priorities and controls ORFs (peacetime only), provides maintenance and repair parts status, and establishes maintenance repair time guidance. Instructions are broad enough to provide flexibility to battalion headquarters in the organization and deployment of maintenance units and the management and control of their operations.

4-28. The MMC provides—

- Disposition instructions for evacuation of unserviceable items that must be routed to other maintenance units or C&C service companies.
- Information and instructions on the use of MWOs.
- Information on priorities relating to repairs of specific types of equipment or support of specific units.
- Maintenance management information derived through analysis of maintenance data and reports; ensures availability of repair parts required for maintenance or support battalion operations.

The MMC does not directly control workload input of DS maintenance units; however, it can influence the workload and accomplish workload balancing by recommending priorities and changes in repair time guidance.

EVACUATION MANAGEMENT

4-29. Items being evacuated by owning units are normally turned in directly to a maintenance unit or prepared for retrograde as directed by the MMC. If materiel is identified for retrograde, it will be processed by DS units and shipped directly to a port.

4-30. Normally, the MMC will publish evacuation instructions applicable for a specified time period to avoid the necessity for providing individual instructions for the disposition of all items requiring evacuation. MMC may require reports on certain critical or controlled items before issuing disposition instructions. The TAACOM or Corps C&C performs the mission.

SUPPORT OPERATIONS OFFICE

4-31. The support operations office coordinates all maintenance operations in a support group or battalion, provides guidance on maintenance priorities, and sets objectives for production.

4-32. The relationship between the support operations office and shop officers is vital to mission success. The support operations officer coordinates and integrates the battalion's DS-level maintenance mission.

BATTALION-LEVEL MANAGEMENT

4-33. At the battalion level, the support operations officer manages DS-level supported customer units. He supervises, controls, and directs the operation of battalion units for—

- DS-level maintenance.
- Recovery/evacuation.
- Repair parts supply.

- RX.
- Technical assistance.

The support operations office is also a key element in maintenance data collection by ensuring its units provide automated data and generate appropriate maintenance reports on their operations.

4-34. The battalion headquarters commands and controls the displacement, mission assignment, and operations of its units in accordance with higher headquarters plans, policies, and directives. It provides command direction and instructions, supervises, provides assistance, and performs management and control functions to satisfy requirements of supported units IAW higher commanders' intent.

4-35. The battalion headquarters advises support group headquarters on maintenance and repair parts supply matters. These include recommendations concerning—

- Personnel requirements.
- Facilities and equipment requirements.
- Maintenance performance.
- Repair parts supply status.

They also identify other problem areas as required. The headquarters reports the state of materiel readiness, deployment, and employment of battalion units.

COMPANY-LEVEL MANAGEMENT

4-36. Unlike at battalion and higher levels, maintenance management at company level is more focused on each job. The DS-level maintenance mission is resourced and accomplished at company level. It is here that the assets of personnel, time, and repair parts must be managed most effectively to provide the best support possible with the resources available.

4-37. Many techniques used at battalion level also apply at company level, but they require a more personal, direct approach along with an immediate response to actual or anticipated problems. Effective management at company level requires—

- Leadership.
- Production control.
- Workload analysis.
- Determining maintenance requirements.
- Work simplification and work measurement.
- Total quality management (TQM).
- Quality assurance.
- Motivation.

LEADERSHIP

4-38. All supervisors must use effective leadership. Supervisors must know what is to be done and how and when to do it. They must know resources available to do the job, limitations and other factors

influencing job performance, and how to motivate personnel to improve performance and productivity.

PRODUCTION CONTROL

4-39. Production control involves a number of tasks:

- Production planning and scheduling.
- Proper routing and rerouting of work.
- Attaining maximum production by keeping all shop elements working at or near capacity.
- Proper shop layout to achieve time, motion, and movement economies.

Workload Analysis

4-40. Workload analysis is part of the overall production control process. It requires a continuous review of work in process as well as new work, and it is a prime responsibility of the maintenance control section. It helps prevent overcommitment of resources when too much work is accepted with unrealistic priorities and deadlines. Analysis is continuous and is aided by the use of automated SAMS outputs.

Estimating Maintenance Requirements

4-41. In order to forecast maintenance locations and anticipated workload, the control section of each DS maintenance unit maintains a current operations map and equipment density list. The operations maps show personnel the location of adjacent units and supply distribution points, indicate aircraft landing areas, and denote MCP and UMCP locations. MSTs also use them to make strip maps to ensure they arrive at their proper destination. Equipment density lists keep personnel up to date on which and how much equipment is supported and who has it.

Work Simplification and Measurement

4-42. Work simplification and measurement is applied in every unit. Work measurement standards are developed and applied to measure and compare work of repairers and maintenance units engaged in similar types of operations. Units keep records that show production results on a week-by-week basis.

4-43. The most efficient repairers can be compared against the least efficient in terms of quality and quantity of production to obtain a mean or median for measurement of overall performance. Battalion headquarters has information obtained from production reports of other units to permit comparison of production among units or individuals performing the same type of work. Work simplification techniques may, in themselves, uncover ways to improve unit layout to eliminate wasted effort and movement.

TOTAL QUALITY MANAGEMENT

4-44. TQM is a management technique used to supplement quality control procedures by motivating all personnel to produce high-quality work the first time. A functional TQM program becomes evident when soldiers display the motivation and initiative to inspect their own work and take immediate corrective action to resolve quality control problems. TQM should be applied in all units, at all times, in all functions.

QUALITY ASSURANCE

4-45. The objective of quality assurance is to produce high-quality work the first time. An effective quality assurance program is essential to proper, effective performance of the DS-level maintenance mission. It covers all actions necessary to provide adequate confidence that materiel, data, supplies, and services conform to established technical requirements to achieve satisfactory performance.

4-46. Quality control is a subfunction of quality assurance. QC must be applied to all aspects of company operations, including initial, in-process, and final inspections. Technical manuals appropriate to various items of equipment are the basic tools of quality assurance and quality control. Thorough familiarity with DA Pamphlet 738-750, AR 710-2, and AR 750-1 is required. Technical manuals are also important to overall quality assurance.

MOTIVATION

4-47. Supervisors must continually motivate personnel to perform to Army maintenance standards. Commanders and shop officers must develop incentive programs that reward superior performance.

SECTION III - MAINTENANCE MANAGEMENT INFORMATION SYSTEMS

4-48. Section III discusses the maintenance management information systems, SAMS and ULLS-G. Automation greatly increases the ability of maintenance managers to manage the flow of maintenance data. SAMS automates the DS-level maintenance functions while ULLS-G automates unit-level functions. Maintenance management includes forecasting, distributing, scheduling, and controlling the production of maintenance workloads. Factors that impact on maintenance management are budget, supply, personnel, and property accountability.

4-49. At division and nondivision levels, work force utilization data, maintenance performance measures, and cost accounting are managed by SAMS and ULLS-G. When fully developed, SAMS will provide a maintenance management system that ranges from unit to national level. ULLS-G provides unit-level maintenance activities with automated maintenance management procedures. SAMS and ULLS-G procedures are in DA Pamphlets 738-750 and 750-35 and appropriate end user manuals.

STANDARD ARMY MAINTENANCE SYSTEM

4-50. SAMS for DS/GS levels provides maintenance and management information to each level of command from user to division, corps, wholesale, and DA. SAMS is the primary tool maintenance managers use to maintain maintenance information flow between the users, DS and GS levels, and higher-level commands. SAMS is divided into two levels, SAMS-1 and SAMS-2.

SAMS-1

4-51. SAMS-1 operates at the DS/GS maintenance company level. It is an interactive, real-time, maintenance management system that operates on a desktop computer system. SAMS-1 has the capability to produce work order numbers automatically, requisition parts, manage bench and shop stocks, manage shop workload, and provide detailed civilian and military labor costs related to specific work orders.

Functions

4-52. SAMS-1 tracks all work orders and repair parts requisitions and processes status and usage information received from supporting units (ULLS-G). It also passes significant management information to higher commands (SAMS-2).

Interfaces

4-53. SAMS-1 interfaces with the following Standard Army Management Information Systems:

- SAMS-2.

- ULLS-G.
- SARSS.
- Standard Army Maintenance System-Installation/TDA (SAMS-I/TDA).

NOTE

Interface infers data flow in both directions.

Inputs and Customer Benefits

4-54. Table 4-1 shows what information SAMS-1 gets and what it does for the customer.

Table 4-1. SAMS-1¾ Inputs and Customer Benefits

Inputs	Customer Benefits
SAMS-1 receives the following information: • Data from customer units (ULLS-G) • Data from DS/GS maintenance units (SAMS-1) • Data from higher levels (SAMS-2 and SARSS) • Military standard requisitioning and issue procedure (MILSTRIP) • Shop stock list (SSL) and bench stock list (BSL)	SAMS-1 provides accurate and timely— • Requisitioning of parts • Issuing of bench and shop stock • Transferring of repair parts • Accounting of nonstock items ordered but not used • Maintenance of SSL and BSL records • Posting of the document register • Replenishing of shop stock • Controlling of funds for expendable supplies • Issuing and repairing of ORF assets • Accounting for man-hours

SAMS-2

4-55. SAMS-2—

- Operates at command levels above the DS/GS maintenance company, such as the support battalion or maintenance battalion

(support operations office) or maintenance battalion (MATO), MMC, division support command, corps support group, corps support command, and EAC.

- Is an interactive, real-time, maintenance management system that operates on a desktop computer system.
- Has the capability to automatically produce management information related to work orders, shop capabilities, backlogs, manpower and parts costs, and inoperative equipment status.
- Provides information through preformatted reports, manager-created reports, and visual displays.

Functions

4-56. SAMS-2 collects, stores, and retrieves maintenance and supply information from SAMS-1 and allows managers to coordinate maintenance workloads. SAMS-2 also passes significant information on to higher commands as well as down to SAMS-1. Table 4-2 shows the progression of SAMS management levels.

Table 4-2. Progression of SAMS Management Levels

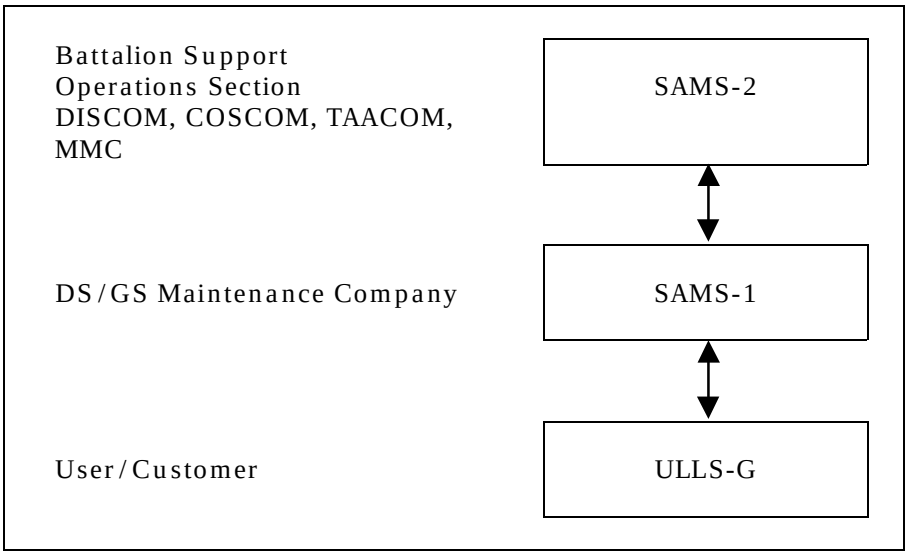

COMMUNICATION CAPABILITIES

4-57. As it interfaces, SAMS has three types of automated communication capabilities:

- Monitored asynchronous protocol.
- Communication man-machine interface.
- Blocked asynchronous transmission.

UNIT-LEVEL LOGISTICS SYSTEM¾ GROUND

4-58. The Unit-Level Logistics System—Ground collects maintenance and supply data and provides management information at the unit level.

The ULLS-G has replaced portions of TAMMS. ULLS-G interfaces with SAMS and SARSS.

4-59. This section will concentrate on ULLS-Ground in support of general Army maintenance. ULLS-G is an automated system developed to meet the maintenance and repair parts management requirements of company (unit) commanders conducting unit-level maintenance operations.

FUNCTION

4-60. ULLS-G provides unit commanders with—

- Improved accuracy and maintenance reporting.
- Consolidated data needed for unit status reporting by automating the—
  - Unit maintenance functions in DA Pamphlet 738-750.
  - Class IX supply functions in DA Pamphlet 710-2-1.

ULLS-G gives commanders and maintenance managers on the battlefield more immediate accurate information for decision making.

HARDWARE

4-61. ULLS-G hardware may differ from unit to unit, but the operating principles of the system inputs and outputs are compatible. Figure 4-3 shows some of the major inputs to ULLS-G.

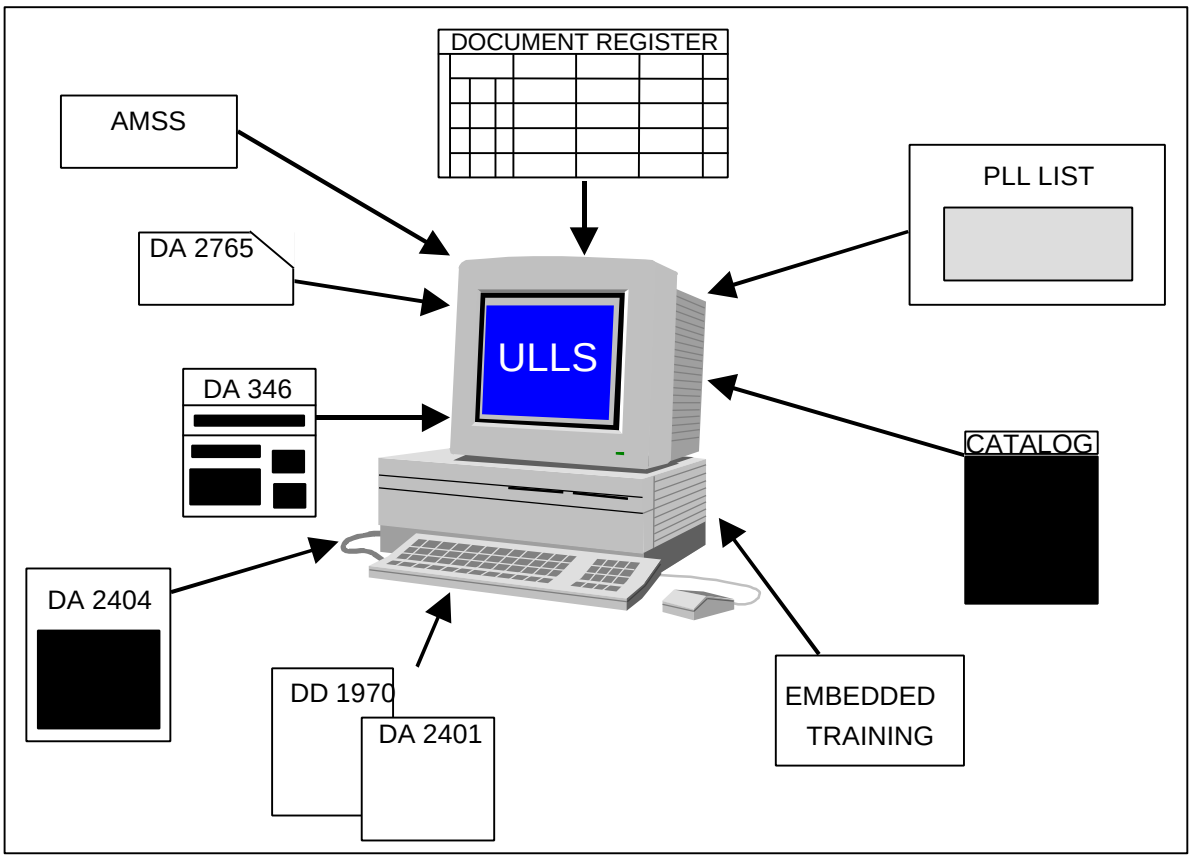

Figure 4-3. Major Inputs to ULLS-G

FUNCTIONAL GROUPS

4-62. The six functional groups available in ULLS-G include—

- Supply.
- Maintenance operations.
- Utilities.
- Embedded training.
- Army Materiel Status System.
- Security.

Table 4-3 shows the function of each group.

Table 4-3. ULLS-G¾ Functional Groups

Group	Function
Supply	Enable operator to process supply transactions and maintain PLL data, including demand records
Maintenance	Enable operator to input and maintain records on equipment, operators, scheduled services, and dispatched equipment
Utilities	Provide backup and restore capabilities for unit data system files and permit establishment of passwords
Embedded training	Provides sustainment training with self-paced tutorials and allows novice users to learn system operation without damage to live files
AMSS	Provides automated materiel condition status reporting
Security	Controls for system users

SUPPLY OPTIONS

4-63. The supply options available in ULLS-G include—

- On-line Class IX catalog.
- Document Control Register (DCR).
- Automated PLL.

Table 4-4 describes the functions of each supply option.

Table 4-4. ULLS-G¾ Supply Options

Option	Description	Function
Class IX catalog	A tailored AMDF of stock items that have current demands	Provides user with current part usage information

Option	Description	Function
Document Control Register (DCR)	Automatically updated list of parts, supplies, and their status	Provides user with— • Current status list of parts and supplies • List of parts on hand but not installed
Automated Prescribed Load List (PLL)	List of authorized quantities by unit	Provides user with automatic replenishment of PLL items Recommends additions and deletions to PLL

MAINTENANCE OPTIONS

4-64. ULLS-G interfaces with the Army Maintenance Management System by automating many maintenance operation forms, procedures and records. Figure 4-4 shows ULLS-G maintenance management outputs.

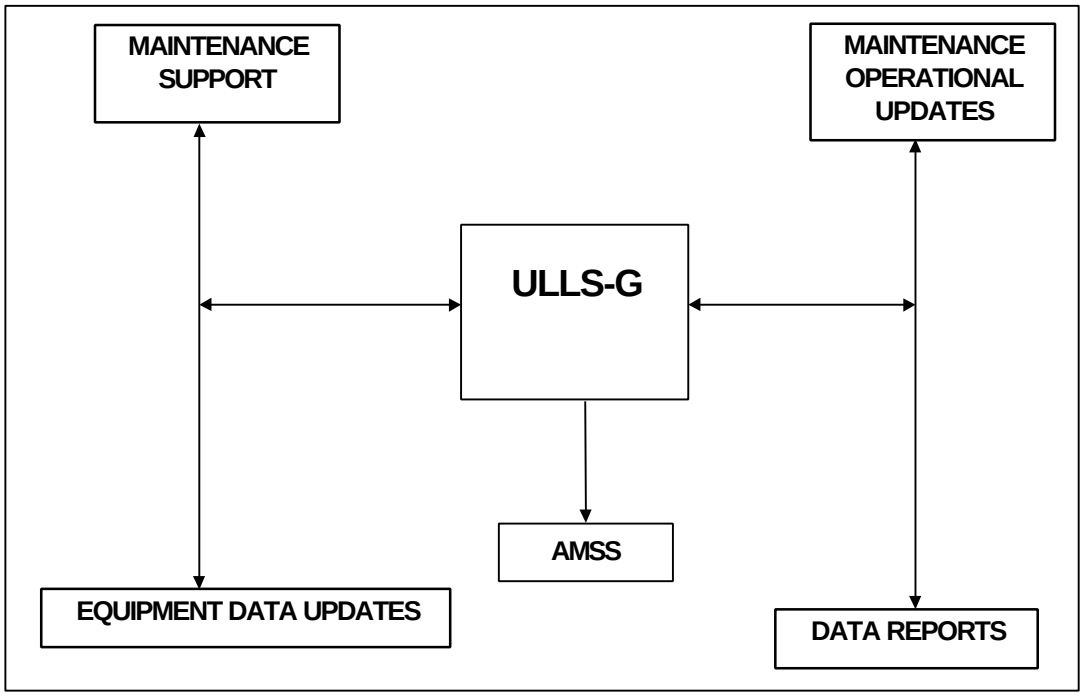

Figure 4-4. ULLS-G Maintenance Management Outputs

ULLS-G GENERATED FORMS

4-65. ULLS-G automates or replaces many complete or partial TAMMS forms with ULLS-G printouts. Some TAMMS forms become unnecessary with the ULLS-G system. Table 4-5 compares some DA/DD forms with their ULLS-G equivalents.

Table 4-5. ULLS-G Equivalent Forms

Form Name	TAMMS	ULLS-G Equivalent
Equipment Utilization Record	DA Form 5823	Not needed in ULLS-G
Motor Equipment Utilization Record	DD Form 1970	DA Form 5987-E
Organizational Control Record for Equipment	DA Form 2401	DA Form 5986-E
Preventive Maintenance Schedule and Record	DD Form 314	DA Form 5986-E
Materiel Condition Status Report	DD Form 2406	Will be automated with completion of AMSS module
Equipment Inspection and Maintenance Worksheet	DA Form 2404	DA Form 5988-E
Maintenance Request Register	DA Form 2405	DA Form 5989-E
Maintenance Request	DA Form 2407	DA Form 5990-E
Uncorrected Fault Record	DA Form 2408-14	DA Form 5988-E
Oil Analysis Request	DD Form 2026	DA Form 5991-E
Equipment Operator's Qualification Record	DA Form 348	DA Form 5983-1-E
Equipment Control Record	DA Form 2408-9	DA Form 5992-E
US Government Motor Vehicle Operators Identification Card	OPT Form 346	DA Form 5984-E

MENU OPTIONS

4-66. The five maintenance options available from the ULLS-G menu are—

- Maintenance operational processes.
- Equipment data updates.
- Equipment data reports.
- Maintenance support.
- AMSS.

MAINTENANCE OPERATIONAL PROCESSES

4-67. Maintenance operational processes and system-generated reports provide the information needed to plan, manage, and control equipment. The operational processes menu contains the options and functions listed in Table 4-6.

Table 4-6. Maintenance Operational Processes

Process	Function
1. Equipment dispatch and return	• Permits regular or alert equipment dispatching with/without DA Form 2404/5988 • Records equipment return from dispatch • Lists all equipment dispatches
2. Maintenance and Inspection Worksheet (DA Forms 2404, 5988-E)	• Provides worksheet for all equipment with a DOD activity address code (DODAAC)
3. Maintenance faults	• Lists all maintenance faults found during PMCS; records technical inspections and parts ordered
4. Parts received/not installed	• Lists all parts received for a document number or administrative number
5. Services performed	• Lists all services performed, or scheduled to be performed, on specified equipment • Updates service due files and equipment data files
6. Operator records	• Maintains record of operator documentation • Automatically calculates operator's miles and maintains records of restrictions, awards, and training

EQUIPMENT DATA UPDATES

4-68. This process allows the user to update equipment and administrative number data. The user can update the equipment catalog, change national stock number (NSN) and serial number (SN) data for administrative number data, and update the equipment data files (EDFs). Administrative number changes will update all applicable system files, such as document control registers, dispatch control files, maintenance fault files, equipment service files, and inoperative equipment files.

EQUIPMENT DATA REPORTS

4-69. The equipment data report option allows users to quickly prepare maintenance and usage reports. Table 4-7 lists some of the available reports.

Table 4-7. ULLS-G Equipment Data Reports

Report	Type
Oil analysis request	Routine or special
Equipment availability	Availability and status
Fuel usage	Monthly, quarterly, or yearly
Service schedule report	By administrative, DODAAC or NSN numbers
Non-mission-capable report	Deadline report
Equipment operator/class code	Operator qualifications by class code or by operator ID card
Equipment usage report	Automated DA Form 2408-9
Equipment data file	Data on major end items, components, or system/subsystems by NSN or administrative number

MAINTENANCE SUPPORT FUNCTIONS

4-70. The following ULLS-G functions are necessary to provide an interface with the SAMS. Table 4-8 lists ULLS-G and SAMS interface functions and what they do for the user.

Table 4-8. ULLS-G and SAMS Interface Functions

Function	Action
SAMS transactions	• Allow user to send maintenance request data directly to SAMS
Maintenance request	• Produces maintenance request with/without administrative number • Produces equipment inspection maintenance worksheet
Manual maintenance status updates	• Allow user to manually update the maintenance status of equipment on the maintenance request register
Automated maintenance status updates	• Allow ULLS-G, through SAMS, to automatically update the maintenance status of equipment that is in direct support
Maintenance request register	• Displays or prints the maintenance request register
Automated maintenance master data	• Updates the equipment catalog file and allow user to print the master file
AMSS	• Sends the Materiel Condition Status Report forward to the MMC

UTILITIES OPTIONS

4-71. Utilities options that can be selected from the menu system provide system security features through commander-assigned passwords and user identifications, which permit only authorized users to enter the ULLS-G system.

EMBEDDED TRAINING

4-72 The embedded training package available on the ULLS-G system allows novice operators to receive ULLS-G training directly from the system software. The embedded training package available from the menu system provides the following user benefits:

- A guided tour of the ULLS-G system, including the menu system, available reports, and hardware-software interface with other systems.
- Practice using the system without risk of damage to live files.
- Sustainment training for all users.

AMSS OPTIONS

4-73. AMSS options automate the materiel condition status report (MCSR). The AMSS options allow units to send and receive AMSS records from ULLS-G through SAMS to the Logistics Support Activity (LOGSA). It also allows the unit to generate and submit an automated MCSR for unit status reporting.

SECURITY OPTIONS

4-74. The ULLS-G security options allow the commander to control user access to the system. The options include updating user information, user access, and adding or deleting system users.–

SECTION IV - MAINTENANCE CONTROL

4-75. Section IV discusses maintenance control (shop office) operations and procedures. Maintenance control is a key element of effective maintenance management. It directs and controls work in a maintenance shop in a manner that provides for maximum output of quality work.

4-76. A primary function of maintenance control is to minimize and, when necessary, correct overload conditions in the shop. While a maintenance shop should always work at or near capacity, backlogs must be kept manageable. Overloads are caused by improper routing of work, lack of personnel, or failure to inform higher headquarters of workload problems. TC 43-4 provides details on how to use automation as a tool supporting effective, efficient maintenance operation management.

PROCEDURES

4-77. Maintenance control is a key element of maintenance management. In a maintenance shop, maximum production, effective use of personnel and facilities, and orderly progression of work depend on an efficient, effective maintenance control element. Maintenance units have a maintenance control section, commonly referred to as the "shop office," to accomplish production control functions.

4-78. For operational purposes, the maintenance control section is usually organized according to the functions performed. The result is a maintenance control element, a quality control or inspection element, and a shop supply element. Maintenance control elements perform the following functions:

- Carefully screen maintenance requests.
- Assign work to various shop sections.
- Maintain workload status in the shop section.
- Improve operational procedures.
- Assist in determining parts requirements.

OPERATIONS

4-79. Maintenance control operations involve directing and controlling work flow. Maintenance control requires common sense, effective planning, close supervision, and prompt remedial action. It also requires the managerial tools to direct and control work flow through a maintenance shop in a manner that results in the maximum production of quality work.

COORDINATION

4-80. The maintenance control section must effectively coordinate with the unit's SSA to ensure prompt availability of required repair parts and other maintenance supplies. Table 4-9 outlines the coordination steps.

Table 4-9. Coordination Steps

Step	Action
1	Schedule shop input and assign work to various shop sections to keep all shop elements working at capacity.
2	Carefully screen maintenance requests and inspection reports to ensure maximum unit-level repair. This may also involve evacuation of an item based on the availability of resources, the capability of personnel, and shop capacity.
3	Keep abreast of the status and quantity of work in each shop section to foresee and minimize overload and to take corrective action when necessary.
4	Aggressively pursue repair parts that are not available within the unit.

OVERLOADS

4-81. A prime function of a maintenance control section is to take action to minimize or reduce overload conditions in any of the shop sections. Supported units expect prompt repair and return of items taken to DS level maintenance. Overload conditions in any of the shop sections can seriously delay repair operations to the detriment of the unit's overall maintenance mission.

4-82. Overload conditions can result from—

- Failure to perform unit-level maintenance.
- Required workload temporarily exceeding the available capacity of one or more maintenance shop sections.
- Temporary loss of maintenance capability in the maintenance shop section.
- Failure to evacuate work as directed.
- Competing priorities due to tactical operations.

AVOIDING OVERLOADS

4-83. To avoid overloading—

- Distribute work among the various shop sections to keep all sections working at or near capacity. This is done by carefully routing jobs entering the shop. Routing is the sequence of repair operations that ensures complete repair of each item in the shortest time possible. Any interruption in the normal flow of work needs immediate attention.
- Resolve the problem by rerouting work or supplementing the capacity of the overloaded section with personnel from other sections working below capacity. The battalion may also take action to realign missions, reduce work loads, or provide additional personnel. Refer to Table 4-10.

- Analyze workloads during field operations. This is critical. Available man-hours may be severely reduced by guard duty, defense operations, enemy attacks, weather, unit movement and set up, details, and so forth.
- Work with the chain of command to ensure that necessary details are properly apportioned. Thus an overloaded section provides few personnel for special requirements while another section that is not overburdened picks up the majority of the special duty.

Table 4-10. Rerouting the Work

When...	Consider...
Shifting personnel,	• Their individual capabilities. • The degree of training necessary to permit them to perform the functions required.
Unit personnel are cross-trained in several specialties,	This as an alternative to shifting personnel.
Movement is impractical due to the partial disassembly of bulky equipment or other factors,	• Moving repairers from other sections to the job. • Changing the sequence of repair operations. • Moving all items to another shop section.
A vehicle needs engine repairs as well as body and fender work,	Performing the engine repairs first.
The number of engine repair jobs exceeds the capacities of available automotive mechanics,	Completing the body repair work first.

MAINTENANCE CONTROL OFFICER

4-84. For an effective maintenance control operation, the maintenance control officer must—

- Have a thorough knowledge of the mission and functions of the entire company.
- Be thoroughly familiar with capabilities and capacities of the individual sections.
- Keep informed of priorities assigned to supported units, expected workloads, shop progress, difficulties encountered, and maintenance supply status.

MANAGEMENT TOOLS

4-85. Maintenance control requires a continuous flow of data from all maintenance elements in the company and the shop supply element. The control section serves as the center for the production control process. The SAMS-1 reports listed in Table 4-11 are commonly used for automated maintenance management at DS level.

Table 4-11. Commonly Used SAMS-1 Reports

Title	Function
Production / Backlog Status Report (AHN-022)	Shows overall distribution of workload by maintenance shop: • Backlog, distribution by section. • Workable backlog. • Work orders evacuated. • Work orders deferred. • Status. • Back order age. (Report can be run daily or weekly.)
Work Order Register Status (AHN-007)	• Work orders in WON sequence. • Equipment, customer, man-hours, and work order status data. • Total unit backlog and trends.

Shop Section Summary (AHN-006)	• Open work orders and their status.
	• Work order parts required and supply action.
	• Only parts on document register.
	• Current, 30-, 60-, and 90-day status (tailored)
	  • This data is used for reviewing--
	  • Shop backlog.
	  • Shop expediency of repairs.
	  • Workload trends efficiency in determining and ordering repair parts.

TUB FILE

4-86. Tub files are constructed by the unit as a backup to the automated systems. Their use is not mandatory and other file systems may be used. Size and design are dictated by unit requirements. Tub files are used to store maintenance work request envelopes (DA Form 3999-4), which contain active maintenance requests (DA Form 5988-E/5990-E) and pertinent records such as parts requests, continuation sheets, and inspection forms.

4-87. Tub files are organized into sections by status. It is recommended for ease of maintenance that common files be located in a single location. This encourages use and accuracy. The DA Form 3999-4s are moved from section to section as a particular job progresses. They are stored in maintenance request number sequence in respective tub file sections.

4-88. Tub files are maintained by four sections in order to control the maintenance backlog: inspection, maintenance control, shop supply, and maintenance shop section. Each maintenance shop section maintains its work orders in status tub files as shown in Figure 4-5.

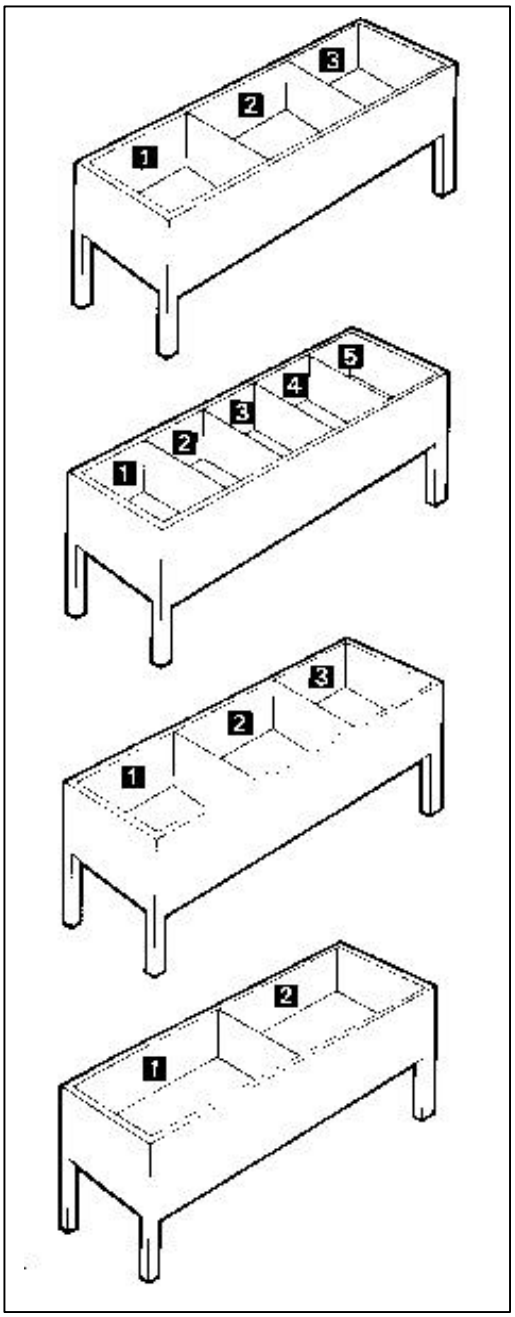

Figure 4-5. Tub Files

PRODUCTION METHODS

4-89. Production methods used in a DS maintenance unit include base shop (bay shop and job/bench shop) and on-site maintenance operations. The method used depends on the type of materiel to be repaired and the personnel, facilities, and time available. The production line is a production method primarily used by GS and higher-level maintenance activities. It may be used to a very limited extent at DS level for repairing large quantities of RX items.

PLANNING AND CONTROL

4-90. The production, planning, and control (PP&C) process is used as a major tool at the local, regional, and national level to plan and control sustainment maintenance requirements and performance. PP&C meetings are held monthly at the local level and quarterly at regional and national levels.

4-91. Local-level initial PP&C meetings review the performance of the current year production program and identify requirements for the upcoming fiscal year. The local manager develops the annual program based on requirements for the geographic area and its capabilities and capacity. The local manager forwards the recommended program to the regional manager, who reviews the requirements and uses this information to select NSNs for concentrated repairs at single installations called centers of excellence (COE).

Center of Excellence Selection

4-92. COE-reparable candidates are generally selected from items that appear on the installation's RX lists. Lines are reviewed in light of readiness and availability needs, cost avoidance, and annual demands. Readiness and availability impacts are determined by reviewing historical weapon system readiness/availability, asset posture, and the item's availability through the wholesale system.

4-93. Selection priority is assigned to each candidate item based on potential cost avoidance per hour. Cost avoidance is evaluated on the difference between the repair or buy cost prior to the establishment of the COE and the repair cost as a COE item repaired at one location. "The "top 300 cost drivers" for each installation may be used to identify candidates for repair in a COE, even though they may not already be on an installation RX list.

4-94. COE candidates are reviewed and selected based on the following criteria:

- The item must support a major weapon system or be a significant readiness/availability item.
- Cost to repair (including transportation, packing, and fully burdened labor and materiel) must be less than 80 percent of the buy cost (AMDF price minus table credit). Or the item must be in short supply at the wholesale level and projected demands will exhaust current stockage within six months.

- There must be at least two demands for components per year within the region for aviation reparables.
- Items on DS RX lists that do not require GS-level repair should not be considered.
- The item must currently be repaired by one installation with at least six repairs per year (ground) and three repairs per year (air).
- The washout rate for the item must be less the 25 percent at the COE.
- Wholesale items must meet established stockage thresholds.

Repair Quotas

4-95. Maintenance activities will be workloaded based on their capacity and capability. When the sustainment maintenance manager (SMM) selects an item for the reparable program, an annual repair quota, by month, will be assigned for the item during the PP&C. The repair quota assigned to a COE item will be initially based on projected demands. These quotas may be reviewed and modified at subsequent PP&Cs. Changes may be required based on specific reasons, such as actual demands, capacity limitations, training cycles, or reported installation excess.

4-96. COE repair quotas will be initially set at 80 percent of the previous year's demands and will be sent to each RSMM for review prior to the quarterly regional PP&C. All changes in production goals will be justified to the RSMM and the other LSMMs. Changes in production schedules for national work will be coordinated with the NSMM. Input for all the LSMMs, the RSMM, and the NSMM is required to establish a COE line.

4-97. Once a COE line is accepted, the installation has a maximum of 90 days to prepare the production line before the quota is executed. The RSMM recommends which maintenance activities in the region will be the COE site for a specific reparable line based on the local bid submitted by the LSMM. The recommendation is based on several criteria, including the bid for man-hours and parts submitted by the LSMMs:

- Repair costs (parts and fully burdened labor).
- Washout rate.
- Capacities and capabilities.
- Training requirements.
- Demands.
- End item density.
- COE for similar item.
- Special repair authority (SRA).

Realignment

4-98. COE lines are realigned as follows:

- COE assignments and performance evaluations are conducted on a quarterly basis during PP&C meetings.

- The evaluation process identifies COE lines that may be advantageous to reassign to another installation or state within the region.
- The RSMM uses the following guidelines to reassign COE lines:
  - All COE lines with average repair costs exceeding the COE bid by 25 percent or greater after 12 or more months are reviewed to determine reassignment or retainment.
  - When COE turnaround time (TAT) over the last 6-12 months is excessive (approximately 25 percent greater than the regional average), and another installation/state can repair the items with a shorter TAT at comparable costs, the COE will be reassigned.
  - When the current COE no longer has the capability to repair the regional program, the RSMM may recommend a new or multiple COEs.
  - When a new installation/state meets all repair criteria and is clearly advantageous as the COE due to significantly lower costs, predominance of the regional demand, SRA authority, or material time and training required, the COE will be reassigned.
  - When the current COE's capacity is overwhelmed by new regional players or increased demands from current regional participants, a new COE or a second COE will be assigned.

4-99. National-level work is work that can be accomplished in the region by sustainment maintenance activities to meet wholesale-level requirements. Wholesale item managers identify candidate assets for regional repair and send the RSMM requests for bid and a comprehensive statement of work for review and distribution to LSMMs.

4-100. The LSMMs assess their work center capacity and capability, parts costs, packaging/crating costs, etc., and submit their bid to the RSMM. The RSMM reviews the LSMM's bid and submits the regional proposal to the NSMM, who reviews and submits it to the item manager. The proposal becomes an official document representing a binding agreement with the installation and the wholesale level.

BAY SHOP

4-101. The bay shop production method is used when a variety of jobs are performed in the shop or when the item being repaired is difficult to move. Under a bay shop method of operation, the equipment to be repaired remains in one shop location until work is complete. The soldiers, tools, and equipment needed to do the work move to the equipment/bay shop. Under a modified bay shop operation, personnel or equipment performing the same or similar jobs are grouped together in sections. The equipment to be repaired moves from one section to another at irregular intervals until the work is complete.

4-102. Bay shops are used to repair vehicles, artillery, construction equipment, major missile items, and materials-handling equipment (MHE). Assemblies, components, and on-equipment material may be removed from an end item in a bay and repaired in other shops (for example, a fuel and electric shop). In a field environment, bays are

nothing more than physically separated sections of the maintenance area where work is performed in the open or under maintenance shelters (tents). If adequate covered space is available, buildings may be divided into bays (or stalls).

JOB/BENCH SHOP

4-103. Job/bench shops are used for repair of small items, items requiring a high degree of technical skill, or items requiring repair with equipment mounted in a shop vehicle. Work performed at stands or benches under maintenance shelters or in shop vehicles is considered job shop repair. Items repaired by this method include—

- Components and assemblies.
- Small arms and fire-control instruments.
- Fuel and electrical system components.
- Electric motors.
- Leather and textile items.
- Communications-electronics equipment.
- Missile electronic items requiring repair under controlled conditions.
- Similar items that can be moved without difficulty.

ON-SITE MAINTENANCE

4-104. On-site maintenance is performed by MSTs to the maximum extent possible. There are several advantages to conducting maintenance at the equipment breakdown site, including—

- Reducing equipment downtime, thereby increasing customer unit readiness.
- Eliminating time and resources required for recovery/evacuation.
- Reducing the battlefield signature caused by recovery/evacuation.
- Reducing the potential for increased damage during recovery/evacuation.

4-105. MSTs providing on-site maintenance are organized based on known requirements. They should, therefore, be fully informed before dispatch on the—

- Problem, including type of equipment, malfunction symptoms, and anticipated repair.
- Location, route, and link-up point.
- Requesting unit, point of contact, and frequency and call sign for radio contact.
- Enemy situation and current threat.

PRODUCTION LINE

4-106. The production line method is used to repair or overhaul several similar items when the repair sequence can be divided into a series of independent operations. Production lines provide the most efficient method for repairing a large volume of similar items when the individual operations are not too complicated or time-consuming and the item can be moved easily. The production line is a series of workstations through which similar equipment is passed. Work is performed in sequential order until the final product is repaired.

QUALITY CONTROL INSPECTIONS

4-107. Inspection of materiel is one of the most important aspects of the DS-level maintenance operation. Inspection is essential for an effective, overall quality assurance program. Accurate initial, in-process, and final inspections are vital in maintaining efficient shop operations and ensuring quality repairs.

INITIAL

4-108. Normally, large, bulky, or heavy items such as vehicles, artillery, and materials-handling equipment, are inspected before shop entry to determine equipment faults, extent of work required, economical reparability, parts requirements, and that all on-equipment materiel is present. This initial inspection or preliminary diagnosis is also useful in determining if the using unit has been fulfilling its unit-level maintenance responsibilities. The inspection provides a basis for—

- Recommending evacuation of the item.
- Determining ORF candidates.
- Recommending report-of-survey action (AR 735-5) (in lieu of accepting the item when it appears that equipment damage or unserviceable condition is the result of misconduct or negligence, rather than fair wear and tear or battle damage).
- Determining repair parts requirements.
- Determining man-hours required per the MAC.
- Determining necessary maintenance tasks.
- Estimating required maintenance man-hours.
- Determining if required work is DS-level repair.

For other items, refer to Table 4-12.

Table 4-12. Other Initial Inspection Items

Other items, such as...	Which...	Are...
• C-E equipment • Small arms • Fire-control instruments • Generators • Motors	• Do not present bulk or weight problems • Require inspection at a bench or by special diagnostic equipment	Inspected in the shop section responsible for their repair

4-109. Jobs noted in Table 4-12 are normally placed into an "in shop" status during inspection for fault diagnosis. This also applies to items that require disassembly to determine equipment faults. Diagnostic inspections are performed using the appropriate technical manual; equipment fault and parts requirements are recorded on DA Forms 2404 and 2407.

IN-PROCESS

4-110. In-process inspections are necessary to ensure work is being performed properly. Shop supervisory personnel perform these inspections. Inspectors assigned to the maintenance control section may assist them.

FINAL

4-111. After work is completed, inspectors perform a final inspection. This inspection determines the adequacy of repairs and requires a technical inspection of an item, including an operability test to determine serviceability and safety. Final inspections are recorded like initial inspections. If a final inspection reveals uncorrected faults or unsatisfactory repair, the item is returned to the responsible shop element with the cause for rejection indicated on DA Form 2407. Inspectors may make minor repairs or adjustments during the final inspection when they do not warrant formal rejection of the item.

PERSONNEL

Maintenance Unit Area

4-112. In the maintenance company, inspectors are assigned to the control section for inspection of automotive, engineer, generator, and communications equipment before shop entry. Although assigned to the control section, inspectors are directly responsible to the company commander for the quality of their inspections; however, their immediate supervisor and the maintenance control officer direct their daily work.

4-113. If the commander desires additional inspection capabilities in the control section, qualified maintenance personnel from the maintenance shop sections may be used. These personnel become part of the inspection element; when no longer required as inspectors, they revert to their respective maintenance platoon or section. Inspection personnel work closely with the maintenance control element when performing inspections. Commanders ensure that inspectors are allowed to independently evaluate work and determine whether quality standards are met without shop influence or coercion. If desired, the commander may designate inspection personnel on unit orders.

On-Site Maintenance

4-114. Inspections are also required during the performance of on-site maintenance. On-site inspection is the responsibility of the team chief or supervisor of the team performing the on-site maintenance functions.

WORK FLOW

4-115. The procedures discussed here apply particularly to vehicular end items and similar heavy items that are inspected prior to shop entry. With slight modifications, they can be adapted to most maintenance shop operations. Forms used in the maintenance shop are illustrated and explained in DA Pamphlet 738-750. The following procedures (refer

to Tables 4-13 through 4-23) are in accordance with the automated (SAMS) system.

Table 4-13. Work Flow Procedures Number 1 (Customer Unit Action)

Step	Customer Actions
1	Verifies equipment malfunction.
2	Annotates signature of requestor on DA Form 2407/5990-E.
3	Prepares DA Forms 2404/5988-E and 2407/5990-E and equipment for support maintenance.
4	Performs unit maintenance on equipment.
5	Enters unit data on DA Form 2407/5990-E.
6	Forwards equipment/request and related forms to maintenance unit maintenance control section .

Table 4-14. Work Flow Procedures Number 2 (Maintenance Control Section Action)

Step	Maintenance Control Clerk Actions
1	Receives work request.
2	Edits/screens/verifies work request.
3	Annotates DA Form 2407/5990-E with work order number and tasks.
4	Prepares DA Form 3999-4.
5	Assigns work section to perform repair (if known).
6	Enters DSU data on required DA Form 2407/5990-E into SAMS-1.
7	Enters status "A" on work order. (Status is updated daily from work sections.)
8	Directs customer with DA Form 3999-4 to inspection section.

Table 4-15. Work Flow Procedures Number 3 (Inspection Section Action)

Step	Inspector Actions
1	Receives DA Form 3999-4.
2	Edits/screens/verifies DA Form 2407/5990-E.
3	Performs acceptance/initial inspection.
4	Annotates DA Form 3999-4 maintenance tasks and parts requested on DA Form 2407/5990-E.
5	Prepares intrashop work request (if required).
6	Assigns task sequence number to each required repair task on DA Form 2404/5988-E.
7	Enters signature (inspector who accepts work order) on DA Form 2407/5990-E.
8	Submits status change "C" to maintenance control clerk (if no parts are required).
9	Issues copy of work request to customer.

Step	Inspector Actions
10	Forwards DA Form 3999-4 with forms and records to maintenance control supervisor or shop supply clerk.

Table 4-16. Work Flow Procedures Number 4 (Maintenance Control Section Action)

Step	Maintenance Control Supervisor Actions
1	Receives DA Form 3999-4.
2	Edits/screens/verifies DA Form 2407/5990-E.
3	Annotates DA Form 3999-4.
4	Prepares evacuation request (if required).
5	Determines repair priorities (repair, evacuation, ORF, intrashop, or deferred, etc).
6	Enters tasks from inspection section into SAMS-1 (through the maintenance control clerk).
7	Submits appropriate status (evacuated, ORF, deferred, etc) to maintenance control clerk.
8	Forwards DA Form 3999-4 with forms and records to shop supply clerk and shop repair section.

Table 4-17. Work Flow Procedures Number 5 (Shop Supply Section Action)

Step	Shop Supply Section/Clerk Actions
1	Receives DA Form 3999-4.
2	Edits/screens/verifies DA Form 2407/5990-E.
3	Annotates DA Form 3999-4 and DA Form 2407/5990-E when parts are issued.
4	Prepares repair parts listed on DA Form 2407/5990-E using SAMS-1.
5	Performs supply actions and follow-ups.
6	Submits status change "1" or "K" for awaiting parts and "C" when parts are on hand to maintenance control clerk.
7	Issues repair parts to shop repairer.
8	Forwards DA Form 3999-4 with forms and records to maintenance control supervisor or shop section supervisor.

Table 4-18. Work Flow Procedures Number 6 (Repair Shop Section Action)

Step	Shop Section Supervisor Actions
1	Receives DA Form 3999-4.
2	Annotates DA Form 3999-4.
3	Assigns repairer/mechanic based on repair priority.
5	Submits status change "B" to maintenance control clerk when work is started.
6	Enters man-hours remaining on task work sheet.
7	Forwards task work sheets for daily man-hour accounting to maintenance control clerk.
8	Performs in-process inspections.

Table 4-19. Work Flow Procedures Number 7 (Repair Shop Action)

Step	Repairer/Mechanic Actions
1	Receives job and repair parts.
2	Verifies correct parts on hand for task/job completion.
3	Annotates DA Form 2407/5990-E (work started by) and logbook entries (when required).
4	Performs assigned repair task.
5	Enters signature (repairer) on DA Form 2407/5990-E.
6	Informs supervisor when job is completed.
7	Forwards work completion information on DA Form 2407/5990-E to shop section supervisor.

Table 4-20. Work Flow Procedures Number 8 (Repair Shop Section Action)

Step	Shop Section Supervisor Actions
1	Receives information from repairer.
2	Verifies all tasks on DA Form 2407/5990-E are completed.
3	Annotates DA Form 3999-4.
4	Performs quality control inspection.
5	Directs rework as needed (places items in the holding area).
6	Submits status change "E" to maintenance control clerk when work is finished and "C" if other work is required.
7	Forwards DA Form 3999-4 with forms and records to the inspection sections.

Table 4-21. Work Flow Procedures Number 9 (Inspection Section Action)

Step	Inspection Section Actions
1	Receives DA Form 3999-4.
2	Edits/screens/verifies DA Form 2407/5990-E.
3	Annotates DA Form 3999-4 and DA Form 2407/5990-E (final inspection).
4	Performs final inspection.
5	Directs additional/corrective work if job does not pass final inspection.
6	Assigns additional task sequence numbers (if required).
7	Enters signature (inspector) on DA Form 2407/5990-E.
8	Submits status change "F" to maintenance control clerk for final inspection passed (other status as appropriate).
9	Forwards DA Form 3999-4 with forms and records to maintenance control clerk.

Table 4-22. Work Flow Procedures Number 10 (Maintenance Control Section Action)

Step	Maintenance Control Clerk Actions
1	Receives DA Form 3999-4.
2	Edits/screens/verifies signatures/entries on DA Form 2407/5990-E, including intrashop jobs.
3	Annotates DA Form 3999-4 (initial customer notification).
4	Prepares closeout of all tasks on DA Form 2407/5990-E. Submits status change "S" when work is completed.
5	Performs initial unit contact.
6	Enters contacted unit/time on DA Form 3999-4. Submits status change "R" when customer is notified
7	Issues completed work request to customer. Submits status change "U" to close job when picked up.
8	Forwards completed work request to shop office files.

Table 4-23. Work Flow Procedures Number 11 (Customer Unit Action)

Step	Customer Actions
1	Receives repaired equipment.
2	Annotates receipt of equipment with signature on DA Form 2407/5990-E.
3	Performs acceptance inspection on equipment.
4	Submits unit's copy of work required to maintenance control clerk and receives completed copy for unit files.

INTRASHOP WORK ORDERS

4-116. Intrashop work orders are used when components or assemblies are removed by a shop section for repair by another section in the same unit. Work orders prepared for these transactions provide an audit trail for the parent work order. The inspection section or requesting shop section personnel prepare the intrashop maintenance request (DA Form 2407/5990-E). When the maintenance control clerk enters the intrashop work order into SAMS-1, the parent work order remains in the shop office. If work can be done on the parent and intrashop work orders simultaneously, both work orders are routed to their respective shop sections.

EVACUATION

4-117. Evacuation is the act of moving equipment and documentation from a maintenance activity to another maintenance activity. For example, during a major offensive operation, a direct support maintenance company shop officer realizes that the shop has become overwhelmed with work and a backlog of open jobs is beginning to accumulate. Evacuation of the maintenance requests backlogged may

allow equipment to be repaired and returned to the using unit on a more timely basis.

4-118. The support operations or maintenance control officer's decision to evacuate equipment is based on—

- Initial inspection findings (repairs beyond authority of activity).
- Current or projected workload at the repair activity.
- The time required to repair the item.
- Capability of the unit to complete repair (lack of personnel, equipment, time, etc).

Follow the procedures in Table 4-24.

Table 4-24. Evacuation Procedures

Step	Who...	Will.....
1	SOO or MCO	Coordinate the decision to evacuate a work order with— • Maintenance control supervisor. • The supporting maintenance activity.
2	Maintenance control supervisor	Alert appropriate maintenance shop sections to prepare for and evacuate designated work order.
3	Maintenance control clerk	• Prepare DA Form 2407/5990-E, annotate DA Form 3999-4, obtain MCO or MCS signature for approval. • Enter status code "O" (awaiting evacuation) and place DA Form 3999-4 in the tub file. • Annotate DA Form 3999-4 (once evacuated) and place request number and support activity in upper left corner. • Retain copy number 1 (receipt) of DA Form 2407/5990-E and enter status code "M" (evacuated for repair and return). • Upon completion of repair, place copy number 3 (organization) into DA Form 3999-4. Annotate and close DA Form 2407/5990-E in accordance with procedures.

MANAGEMENT TOOLS AND TECHNIQUES

4-119. Automation greatly increases the ability of maintenance managers to make decisions regarding maintenance operations. SAMS provides the maintenance manager the tools needed to make timely and accurate decisions.

PRIMARY TOOL

4-120. SAMS is the primary tool used for maintenance management. Daily transfers of data from the maintenance company maintenance control section to battalion support operations section (SAMS-1 to SAMS-2) keep the support operations section's maintenance officer abreast of the maintenance situation in subordinate unit shops.

4-121. In addition to automated SAMS reports, support operations sections may develop local procedures and reports to track maintenance status (such as daily submission of DA Forms 2406, daily production reports, backlog reports, jobs awaiting parts, and so forth).

DAILY ANALYSIS

4-122. The daily analysis of SAMS printouts (or other locally directed reports) will reveal trends or situations requiring command or staff action. Examples of problems to watch for are–

- Jobs greater than 30-60-90 days.
- Significant increases in shop input.
- Excessive number of items awaiting parts.
- Low production.
- Excessive time in any status.
- Class IX requests with no status.

4-123. Such problems might be caused by poor—

- Unit-level maintenance.
- Supply procedures.
- Production/quality control.
- Repair techniques.
- Treatment of equipment.
- Emphasis on-site maintenance.

Corrective actions for these problems might include augmenting subordinate units with additional repair capability, cross training, revising evacuation policies or maintenance time guidelines, increased use of controlled exchange or fabrication.

DAILY TRANSFERS

4-124. On a larger scale, the MMC keeps abreast of the maintenance situation in the corps or TAACOM through its SAMS-2. Daily transfers are received from subordinate company or battalion SAMS sites. This data is used to—

- Evaluate workload capabilities and the capabilities of maintenance units.
- Cross-level maintenance resources and repair parts.
- Establish maintenance priorities.
- Direct evacuation and retrograde.
- Coordinate maintenance issues though the support operations section for resolution.

4-125. Maintenance data is also used by TRADOC and AMC in analyses to determine manpower requirements and TOE structures, repair parts requirements, trends, equipment reliability, and force readiness. These analyses require accurately reported data.

NOTE

Preformatted, hard-copy, numbered outputs are available for management at the SAMS-1 site (company level).

Hard-copy ad hoc reports may also be produced that provide a wide variety of management data. SAMS-1 currently has 12 preformatted ad hoc reports available. Additionally, the ad hoc inquiry process provides maintenance managers with the ability to produce hard-copy reports per the command's data and format requirements.

Procedures and contents are in AISM 18-L21-AHN-BUR-EM and TC 43-4.

SAMS-1 REPORTS AND OUTPUTS

4-126. Table 4-25 is a listing of SAMS-1 outputs readily available for making maintenance management decisions.

Table 4-25. SAMS-1 Outputs

PCN	Title
AHN-001	Workable Jobs
AHN-002	Shop Stock List (SSL)
AHN-003	SSL/Work Order (WO) Issue Candidate Listing
AHN-004	Customer WO Reconciliation
AHN-005	WO Master Schedule Listing Part I - Work Orders in Shop Part II - Work Orders Awaiting Shop Part III - Work Orders Awaiting Parts Part IV - Other
AHN-013	Supply Activities Requirements
AHN-014	Manager Exception Data
AHN-015	SSL Constrained Replenishments
AHN-016	Error Exception Listing
AHN-017	SSL Audit File Purge Listing
AHN-018	Work Order Detail
AHN-019	Supply Status Listing
AHN-020	RPM Update Exception Listing
AHN-021	Equipment Status Listing
AHN-022	Production/Backlog Status
AHN-023	Bench Stock List
AHN-024	Bench Stock Replenishment Review List

PCN	Title
AHN-025	Shop Stock Bin Labels
AHN-026	Bench Stock List (Purged)/Recommended Deletions
AHN-027	Bench Stock Bin Labels
AHN-028	Follow-Up Error Listing
AHN-029	Baseline Versions Report
AHN-030	Turn-In to Supply Support Activity (SSA) (D6Z)
AHN-031	Recoverable Items Report
AHN-032	SSL Manual Inventory Listing
AHN-033	SSL Inventory Report Part I - Inventory Adjustments Part II - Exception Listing Part III - New Labels Required
AHN-034	NSN/UI Change Report
AHN-035	Man-Hour Accounting Utilization Report (Transfer)
AHN-036	Man-Hour Accounting Utilization Report (History)
AHN-037	RPM NSN Change Report
AHN-038	Task Work Sheet

NOTE

Preformatted reports are available for management at the SAMS-2 site (Battalion Support Operations Office and MMC).

Hard-copy ad hoc reports may also be produced that provide a wide variety of management data. SAMS-2 currently has eight preformatted ad hoc reports available. Additionally, the ad hoc inquiry process provides maintenance managers with the ability to produce hard-copy reports per the command's data and format requirements.

Procedures and contents are in AISM 18-L26-AHO-BUR-EM and TC 43-4.

SAMS-2 REPORTS AND OUTPUTS

4-127. Table 4-26 is a listing of SAMS-2 outputs readily available for making maintenance management decisions.

Table 4-26. SAMS-2 Outputs

PCN	Title
AHO-001	Deadlined Equipment Listing Weapon System Part I - Reportable Items Part II - Maintenance Significant Items
AHO-002	Command Deadlined Equipment Summary Part I - Reportable Items Part II - Maintenance Significant Items Part III - Summary
AHO-003	Equipment Deadlined Over NNN Days by Unit Part I - Reportable Items Part II - Maintenance Significant Items Part III - Summary
AHO-004	Completed Work Order Summary
AHO-005	Support Maintenance Turnaround Time (Days) Unit/Activity
AHO-006	Support Maintenance Turnaround Time (Days) ECC
AHO-007	Support Maintenance Meantime to Repair (Man-Hours), Unit/Activity
AHO-008	Support Maintenance Meantime to Repair (Man-Hours), ECC
AHO-009	Selected Work Order Status Listing
AHO-010	Workload Status Listing Part I - ECC Part II - Unit/Activity
AHO-011	Workload Age Summary Listing Part I - ECC Part II - Unit/Activity
AHO-012	Parts Detail Exception Listing
AHO-013	Multiple Parts Request Exception Listing
AHO-014	Production/Backlog Status
AHO-018	Completed Work Order File Purge Listing
AHO-019	Maintenance Cost Command Roll-Up
AHO-020	Maintenance Cost by Commodity
AHO-021	Maintenance Cost by ECC
AHO-022	Maintenance Cost by Customer
AHO-023	Maintenance Cost by APC
AHO-024	Bypassed Receipted Parts Records
AHO-025	Maintenance Production/Backlog Report
AHO-026	Equipment Deadlined over NNN Days by Battalion Part I - Reportable Items Part II - Maintenance Significant Items Part III - Summary

PCN	Title
AHO-027	Reportable Equipment Validation File Listing
AHO-028	Diskette/Comm Interface Parameter File Listing
AHO-029	Maintenance Production/Backlog Report (by Work Order Count)
AHO-030	Maintenance Production/Backlog by ECC (for Support Unit by Item Count)
AHO-031	Maintenance Production/Backlog by ECC (for Support Unit by Work Order Count)
AHO-032	Work Order Status/Parts Listing
AHO-033	Maintenance Production/Backlog by ECC (for Battalion by Item Count)
AHO-034	Maintenance Production/Backlog by ECC (for Battalion by Work Order Count)
AHO-035	Maintenance Production/Backlog by ECC (for Division by Item Count)
AHO-036	Maintenance Production/Backlog by ECC (for Division by Work Order Count)
AHO-037	Inop Transfer Listing
AHO-039	Monthly Float Usage and Accumulative Report (by SPT UIC)
AHO-040	Monthly Float Usage and Accumulative Report (by LIN)
AHO-041	ORF Status and Utilization Report
AHO-042	Serial Number Tracking Report
AHO-043	Serial Number Tracking Report Purge Listing
AHO-044	Manpower Utilization Report
AHO-046	Manpower Utilization Report Purge Listing

INSPECTIONS AND VISITS

4-128. Inspections and visits are also management tools. They indicate materiel readiness, proficiency of personnel, adequacy of operations, and effectiveness of maintenance and supply management. They allow staff personnel to see conditions as they are in the unit, rather than only as represented in reports. If used properly, they are a quick, effective way of noting and correcting problems. The battalion commander, command sergeant major, support operations officer, maintenance company commander, and maintenance control officer should make subordinate unit visits a matter of routine.

OPERATIONAL READINESS FLOAT TRANSACTIONS

4-129. ORF is a quantity of selected end items or major components of equipment authorized for stockage at CONUS installations and overseas support maintenance activities, which extends their capability to respond to materiel readiness requirements of supported activities. It is accomplished by providing supported activities with serviceable replacements from ORF assets when their like items of equipment cannot be repaired or modified in time to meet operational requirements. The support operations officer or shop officer is responsible for reviewing equipment requirements of supported units IAW ARs 710-2 and 750-1 and when appropriate in directing ORF transactions.

PROCESS

4-130. When an ORF transaction becomes necessary, the following process should be followed:

- Maintenance control supervisor reviews all transactions and their documentation before submission to the support operations or maintenance control officer for final approval.
- Support operations officer or maintenance control officer directs/approves the ORF transaction.
- Maintenance control clerk prepares all documentation for the ORF transaction.

PROCEDURES

4-131. When an ORF transaction becomes necessary, follow the procedures in Table 4-27.

Table 4-27. ORF Procedures

Step	Who...	Will.....
1	Maintenance control supervisor	Monitor and supervise the maintenance control clerk in conducting the ORF transaction.
2	Maintenance control clerk	• Generate a new work order on SAMS-1 for issuing a serviceable float item. • Annotate awaiting float transaction status code "7" (initially) on the new work request on completion of the ORF transaction. • Annotate a "U" (picked up). • Report to the maintenance supervisor when the actual issue and turn-in of property are completed IAW policy and procedures identified in ARs 710-2 and 750-1 and DA Pamphlet 710-2-2. Correct accountability is maintained at the ORF SRA and in the property book.

NOTE

Unit must update property book, AOAP, ULLS-G, etc when a float transaction takes place.

STATUS CHANGES

4-132. Status changes annotated on a maintenance request document are the result of the physical tracking of a job and its documentation. Routinely updated status allows managers to have current visibility of a specific job. Thus, effective emphasis can be applied to expedite supply and repair actions.

4-133. Table 4-28 outlines procedures for changing the status on a work request.

Table 4-28. Status Changes on Work Requests

Step	Who...	Will.....
1	Shop section chiefs	• Submit daily man-hour accounting to the maintenance control clerk on each work order (by shop section that performs hands-on work) using the Task Worksheet, PCN AHN-038. • Submit changes in status by other means (i.e., DA Form 3999-3-R) for sections that do not track man-hours. • Report status changes for all maintenance requests in the section to the maintenance control clerk daily.
2	Maintenance control clerk	• Enter all status changes submitted from shop sections into SAMS-1 at the end of the work day. • Ensure data transfer to SAMS-2 is correct, complete, and timely. • Identify and verify each open maintenance request in the shop against the piece of equipment in for repair. • Monitor and manage the progress of each job in the section. • Provide daily customer disk status report.
3	Maintenance Control Supervisor	• Monitor and review the status of all maintenance requests and ensure the most current status is annotated on all documents. • Directly supervise the maintenance control clerk to ensure end-of-day status changes are properly annotated into SAMS-1.

SHOP SUPPLY OPERATIONS

4-134. Shop supply is a critical aspect of shop operations. This element provides repair parts and consumable items to support DS-level

maintenance operations. A unit with an effective shop supply operation provides effective support to its customers.

4-135. The shop supply element is usually collocated with the maintenance control element; it normally consists of one to two equipment automated logistics specialists who—

- Prepare repair parts requests based on information from repairers or inspectors.
- Maintain an automated or manual document register.
- Process monthly recon with SSA.
- Record information on repair parts supply transactions.
- Receive, store, and issue parts for specific job orders.
- May obtain, store, and issue demand-supported repair parts (shop stock) and obtain and issue high-demand, low-cost consumables (bench stock).
- Monitor turn-in of recoverable items.

ORDERING REPAIR PARTS

4-136. Shop supply clerks use DA Form 2407/5990-E or 2407-1 to request parts with SAMS-1. DA Form 2407/5990-E or 2407-1 must list all parts based on data provided by the inspector. Clerks need the following information for ordering parts electronically:

- Action code.
- Related task number.
- NSN or part number.
- Quantity required.
- Not-mission-capable supply (NMCS) status.

TYPES OF SHOP SUPPLY

4-137. DS maintenance units maintain two types of shop supply:

- Bench stock.
- Shop stock.

AR 710-2 and DA Pamphlet 710-2-2 contain additional details on bench stock and shop stock.

Bench Stock

4-138. Bench stock consists of low-cost, high-usage, consumable items used by maintenance personnel at an unpredictable rate. It must meet criteria set forth in AR 710-2 Bench stock includes—

- Common hardware.
- Transistors.
- Resistors.
- Webbing.
- Thread.
- Welding rods.
- Sandpaper.
- Capacitors.
- Wire.
- Tubing.
- Hose.
- Rope.
- Other expendable materials.

4-139. The maintenance control officer—

- Selects stockage based on mission needs. The only required records for maintenance of bench stock are bench stock record lists (approved semiannually by the commander) and bench stock replenishment tags. (For information of these records, see DA Pamphlet 710-2-2.)
- Closely monitors bench stocks to maintain unit mobility and supply economy. Frequent stockage review and prompt requisition for bench stock items ensures adequate levels of supply.

Maintenance activities may stock up to a 15-30-day supply of bench stock.

Shop Stock

4-140. Shop stocks are demand-supported repair parts and consumables used by a DS-level maintenance activity. Shop stocks support internal DS-level maintenance requirements, both programmed and unprogrammed. Shop stocks are authorized—

- To repair items in support of the reparable exchange program.
- For elements of maintenance units operating at a remote location, such as maintenance support teams.
- To repair items requiring diagnostic modules.
- For maintenance units not supported by an organic supply support activity operating under the direct support system (DSS).

DSS customers are those units that requisition directly from the wholesale supply system through the intermediate level with no backup assigned stockage list at the DS level.

4-141. To qualify for shop stock, an item must have at least three demands in a 180-day control period. Stockage level for shop stock is developed from the requisitioning objective table contained in DA Pamphlet 710-2-2. Replenishment is based on a reorder point. Automated systems may use the use-one, order-one concept. Each shop stock list is reviewed at least quarterly. Items are deleted from stockage—

- When they fail to receive at least one demand in a 180-day control period.
- Unless they support seasonal requirements and demand is anticipated.
- Unless they support requirements peculiar to nonstandard equipment.

FIELD SITE SELECTION AND LAYOUT

4-142. In a maintenance operation, the objective of a good layout is to facilitate the flow of work through the shop and to minimize movement of repair parts, tools, equipment, and personnel. Some compromise must be made because of the need to defend the area. Field environments seldom permit a unit to operate under ideal conditions.

The layout must be tailored to the terrain, tactical situation, proximity of supported units, and type and amount of equipment supported.

SITE SELECTION

4-143. When selecting a field site for maintenance support operations, consider the following criteria. The area should—

- Be reasonably flat with good drainage.
- Be firm enough to permit parking and movement of heavy vehicles and equipment.
- Be accessible to supported units.

Any terrain features in the area that facilitate unit defense must be considered in planning. Streams or marshes can provide flanking security. Hills can provide observation and facilitate fire on avenues of approach. Built-up areas inherently enhance defense and mission support capabilities.

LAYOUT

4-144. Following are principles for laying out the company area:

- Locate—
  - Work sections within ready access to the external road network and to each other.
  - Supply storage areas close to a road to permit easy access for trucks.
  - The service section within easy access of all maintenance shops.
  - Recovery elements in the vicinity of the base maintenance platoon to facilitate support and movement of vehicles.
  - The maintenance control section, inspection section, shop supply, and SSA near the entrance to the company area.
- Ensure—
  - Maintenance areas provide vehicle dispersion and positions where control and security are possible.
  - The area is capable of being defended, using the terrain's natural defense characteristics to augment the defense plan and unit capabilities.

Company area should be reasonably flat, provide good drainage, and contain firm soil for movement of heavy vehicles. Use terrain features to enhance unit defense.

AREA REQUIREMENTS

4-145. Area requirements depend on the style and tempo of combat, which influence workload, security requirements, the ASL volume carried, the commander's willingness to risk, evacuation policy, and size of the workload backlog permitted. Consider the following situations:

- In a desert environment, an enemy that possesses great indirect fire capability or that attains air parity may require the unit to maintain greater dispersion.

- MOUT operations or an enemy in close terrain, one that relies on infiltrating unit perimeters, or one that possesses few indirect-fire weapons may mandate a smaller company area than prescribed by Army doctrine. Figure 4-6 shows a sample maintenance company layout.

NOTE

Under most conditions, the planning area provides enough dispersion to operate without serious degradation of unit efficiency and without significant vulnerability to insurgent attacks

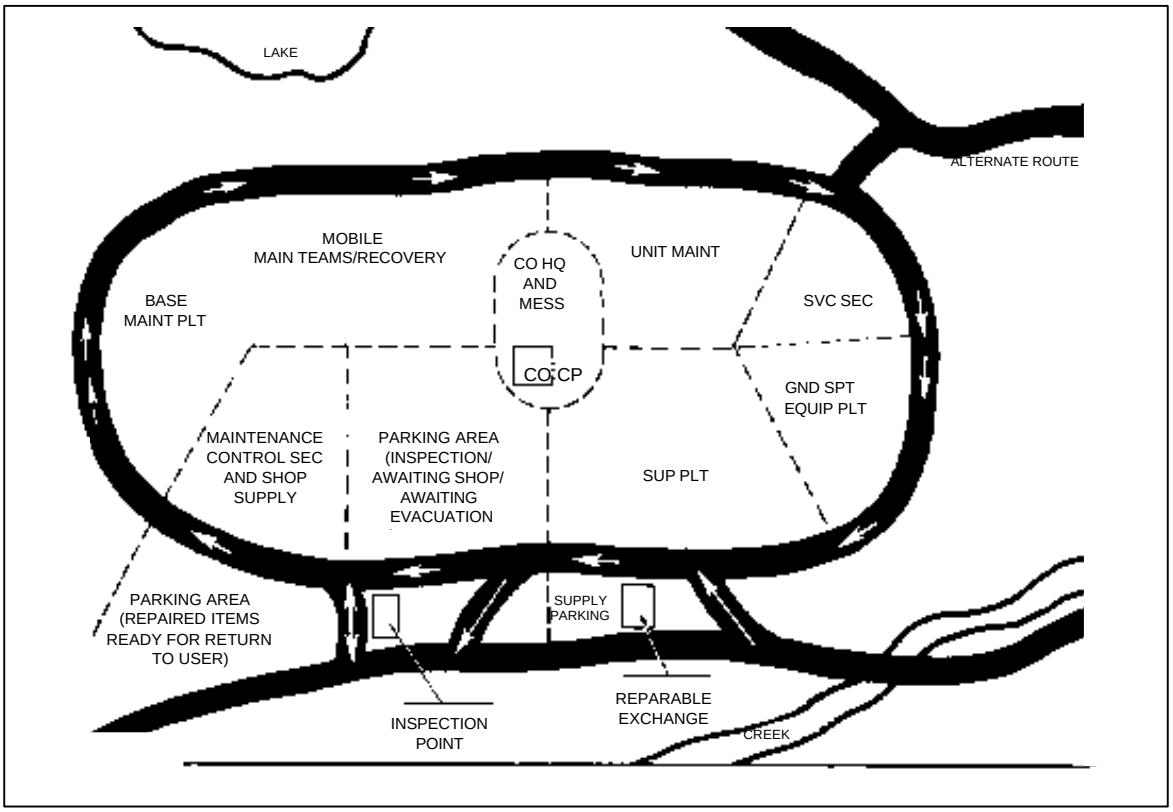

Figure 4-6. Sample Maintenance Company Layout

SECTION V - UNIT INTERNAL MANAGEMENT

4-146. Section V discusses factors affecting mission performance and items of particular interest to DS maintenance units. Unit internal management includes various operations:

- Unit administration.
- Personnel management.
- Inspections.
- Unit dining facility operation.
- Movement and defensive operations.
- Unit security, including physical security and OPSEC.
- Safety.
- Training.
- Communications.
- Rear operations.
- Unit maintenance and supply operations.

4-147. Many of these operations become routine, either by their nature or the commander's decision. SOPs can be prepared for these operations, which relieves the commander of repeated planning and issuing of directives for operations that follow an established pattern. The commander can then concentrate on operations that require planning and directing as requirements develop.

MISSION PERFORMANCE

4-148. Many factors directly affect the unit's completing its maintenance and repair parts supply support mission. Particularly significant are—

- Efficient, effective administration and management of all aspects of unit operations.
- Adequate preparation and implementation of plans for tactical operations.

SECURITY AND MOVEMENT

4-149. Modern tactics of warfare, both offensive and defensive, stress—

- Dispersion of facilities.
- Rapid deployment.
- Selection and use of terrain to facilitate passive defense as well as mission performance.
- Physical and communications security.
- Detailed planning and training in conducting operations.
- Proper intervals and security during movement, which thwarts threat initiatives.

Combat forces may bypass pockets of enemy resistance. Unless proper defensive measures are taken, this will make units in rear areas vulnerable to enemy ground action.

4-150. Low-intensity operations pose the same type problems. Maintenance units will have to operate from, and help defend, logistical complexes that may be subjected to guerrilla or insurgent attack from any direction, at any time, with insecure ground lines of communication.

This requires a continuous defensive posture, even for routine functions like unit resupply.

4-151. DS-level maintenance and other types of support organizations are the backbone of rear operations; they are required to plan and execute related operations and provide personnel and equipment for area damage control teams. DS maintenance units must be able to wage an active defense when necessary and execute tactical-type movements.

ADMINISTRATIVE OPERATIONS

4-152. Security and movement will complicate organizational dining facility, supply, and unit-level maintenance functions. Also, communications with parent units and resupply of all classes of materiel may be interrupted. The possibility of isolated operations for limited periods must be considered. Commanders must make maximum use of their four basic resources—manpower, materiel, time, and facilities—to accomplish the mission regardless of circumstances. Continual attention to personnel management problems is necessary.

4-153. Other areas allied to unit administration that must be given careful attention include—

- Standing operating procedures.
- Administrative records and reports.
- Personnel morale and welfare.
- Organizational maintenance operation.
- Environmental laws and regulations.

4-154. One of the more important duties of the company commander is to inspect the unit's internal operating functions at frequent intervals. Inspections should include—

- Unit dining facility.
- Unit supply and maintenance operations.
- Individual clothing and equipment.
- Safety of unit operations.
- Adherence to unit and higher-level SOPs, directives, and plans.

DIRECT SUPPORT MAINTENANCE UNITS

4-155. Detailed aspects of unit internal management are not described in this manual. Nevertheless, some aspects of these operations are emphasized below, particularly their importance to, or impact on, maintenance unit operations.

COMMUNICATIONS

4-156. The distance between a battalion headquarters and its companies normally exceeds the maintenance unit's wire-laying capabilities. It may also exceed the range of its radios. Therefore, the corps area (or equivalent) communications system is usually the only practical long-range communications system available to interconnect the dispersed elements of a battalion-size CSS unit. The corps area

communications system also provides communications between a maintenance unit and the units it supports.

4-157. Where practical, each maintenance or support battalion headquarters and independently operating maintenance company should have access to a signal-installed-and-operated node. Commanders must plan early with the supporting signal unit to ensure that specific requirements for signal support are available. The two primary means of communication for maintenance units are telephone and radio.

SELECTING A MAINTENANCE AREA

4-158. The selected site should have the best roads in the general area. Ideally, the unit should locate along a main supply route or at the junction of several routes. Individual maintenance units should locate in a centralized area as near as possible to the units they support to be accessible to all supported units. Roads should be well drained. A good internal road network is also required.

4-159. Use hardstands and facilities, if available. Terrain must be generally level; otherwise, the ground must be stabilized to withstand heavy traffic. Large areas are required for parking vehicles. Work areas should be located so that the prevailing wind blows dust away from roads and parking areas.

4-160. Unit defense is another consideration when selecting a site. The area selected should employ natural terrain and obstacles to defend the unit's perimeter. To the extent possible, vegetation should provide cover and concealment of unit operations. Avoid locating the unit in low areas where flooding could disrupt operations. The battalion headquarters and headquarters company usually locates with one of the battalion units.

DEPLOYMENT

4-161. Maintenance units move when the distance to supported units becomes too great to permit efficient service. They may also be required to move because of an increased workload in another area or for defense. The limited mobility of a maintenance unit has a bearing on movement. Organic transportation is insufficient to move the entire company and its ASL at one time (a unit must move all organic equipment and its current workload). Normally, the unit will move itself by shuttle since additional transportation assets will rarely be available. Shuttling involves transporting troops, equipment, and supplies by a series of round trips using the same vehicles.

4-162. Moves should be made in one trip if at all possible. This allows for rapid reestablishment in a new location and speedy resumption of maintenance support. To move the unit in one trip, the maintenance unit must request additional transportation through battalion headquarters. Battalion headquarters, in turn, places the requirement on the nearest transportation movements office.

4-163. Transportation requests should include the date of the move, routes, destination, time and place vehicles are needed, number of

personnel to be moved, and the quantity, types, tonnage, and cubes of materiel to be moved. If additional transportation is not available, the unit will need to use the shuttle system.

DEFENSE

4-164. Maintenance unit commanders must consider possible attacks by aircraft, missiles, airborne troops, guerrillas, insurgents, or elements of organized ground forces. Because of the supplies and equipment they carry and their limited defense capability, maintenance units are an attractive target for guerrillas seeking supplies or trying to destroy equipment.

4-165. Pilferage is also a problem because guerrilla forces obtain some of their supplies through the black market. By nature, maintenance requires a continuous effort and specialized personnel not present in combat units. The continuous use of large numbers of maintenance specialties for security duty can completely eliminate the unit's capability in certain specialized areas.

MINIMIZING EFFECTS ON SECURITY

4-166. The maintenance commander can minimize the effects of security requirements by—

- Selecting a good defensive position. The better the position from a security standpoint, the fewer personnel will be needed for security operations. The position can be improved by coordinating with engineer units.
- Collocating with other support units. Locating the maintenance unit next to another unit in a single base reduces security requirements. If the possibility of air attack makes such concentration undesirable, the separate perimeters of the units can be placed close enough to give mutual support. This is referred to as a base cluster defense operation.
- Coordinating guard selection with technical supervisors. Maintenance specialists should not be arbitrarily assigned to guard duty from an alphabetical roster or selected from unit work sections based on a percentage figure. Supervisors should not select personnel whose absence has a significant effect on the maintenance mission.
- Requesting augmentation by security forces where security requirements seriously reduce the maintenance unit's mission capability for an extended period.

4-167. In most cases, ground attacks are made by guerrillas or insurgents. The attackers generally do not have air, armor, or artillery support. Usually, they also lack sufficient ammunition for sustained action. They depend on the shock of unexpected, intense infantry attacks using automatic weapons, mortars, rocket launchers, and demolition charges. Such an attack can penetrate the maintenance company and cause serious personnel and equipment losses. The

attackers are likely to take advantage of darkness and weather conditions that ground friendly aircraft.

4-168. Planning the layout of the company should include consideration of both defensive characteristics and maintenance mission requirements. Plans to meet any type of attack that the enemy is capable of are prepared and made part of the unit SOP. These plans are revised as often as necessary. They are rehearsed regularly to assure that all personnel know their duties and responsibilities if attacked. In addition to conventional ground attack, defense plans must consider aircraft attacks and enemy use of NBC agents.

4-169. The maintenance company commander must keep abreast of the tactical situation and the enemy's capabilities. The commander should be warned of probable enemy attacks. Most intelligence information is provided through the battalion S2/3. Military police can also provide information, particularly on security of the routes the company uses to conduct daily business with supported units. Additional information may be provided by supported units but must be verified. Security and defense plans are developed according to the mission, area of operations, tactical situation, intelligence, terrain, weather, and unit capabilities.

COUNTERING THE ENEMY THREAT

4-170. Commanders must consider all possibilities for upgrading a unit's defense to counter the enemy threat:

- Direction and adequacy of fields of fire.
- Avoidance of congested sleeping areas.
- Placement of anti-armor and indirect-fire munitions.
- Manning, equipping, placing, and communicating with listening/observation posts.
- Unit dispersion in accordance with the threat.
- Location of a HET evacuation point in or near the unit area.
- NBC defense measures and decontamination plans.
- Placement and use of early warning devices.

4-171. Additional considerations are—

- Selection of—
  - Unit perimeter and use of available terrain to minimize unit defense weaknesses.
  - Unit positions for organic weapons with particular emphasis on crew-served and indirect-fire weapons.
  - Fighting positions and protective bunkers that accommodate all unit personnel.
- Improvement of—
  - Terrain and road network, using organic assets or coordination with supporting engineers.
  - Cover and concealment for vehicles, equipment, and fighting positions.
- Coordination of—

- Field artillery targets.
- Engineer-emplaced and unit-emplaced protective minefields and obstacles on likely enemy ground avenues of approach.
- Air defense and use of unit small arms for air defense (SAFADS) along likely air avenues of approach.
- Level 1 reaction forces within the base and base cluster.
- Support for Level 2 and Level 3 reaction forces.

- Use of—
  - Internal and external patrols for active defense measures.
  - Customer equipment that is awaiting pickup to enhance unit defense.
  - Current intelligence to determine defense manning levels and readiness posture.
  - Internal communications.
  - Radio silence.
  - Prearranged signals for specific actions such as final protective fires.
  - Deception measures.

Chapter 5

Repair Parts Supply Operations

Chapter 5 describes supply support operations, including supply support activity (SSA) organization, operating procedures, and supply sources. Supply support is important to maintenance operations. Maintenance personnel need repair parts, tools, test equipment, cleaning materials, and other supplies to do their job. In order to get the right supplies in the right quantity to the right place at the right time, maintenance personnel need to understand how the system works. DS maintenance units manage three types of supply operations:

- Unit supply—obtains, accounts for, stores, and replenishes supplies and TOE equipment required for the unit's internal operations.
- Shop supply—obtains and provides repair parts and maintenance materials required for the unit's DS-level maintenance mission.
- Class IX supply support—performs all functions related to acquisition, storage, accounting, and distribution of repair parts, maintenance supplies, and RX items in support of unit-level maintenance activities and the unit's DS-level maintenance mission.

Supply policy below the wholesale level is described in AR 710-2. AR 710-2 also implements policy for DS and GS supply support activities and describes supply support operations that apply to divisional and nondivisional DS maintenance units.

SECTION I – SUPPLY SUPPORT OPERATIONS

5-1. Section I discusses repair parts supply support operations at the strategic, operational, and tactical levels. Class IX items (repair parts) consist of any part, subassembly, assembly, or component required for installation in the maintenance of an end-item, subassembly, or component. They support the maintenance and repair functions performed throughout the Army on all materiel except medical materiel. They range from small items of common hardware to large, complex line-replaceable units.

OPERATING CONCEPT

5-2. The degree of repair parts management required is proportional to the contribution they make to operational readiness of the end-items they support. The type and quantity of stocked items directly relate to readiness requirements.

STRATEGIC LEVEL

5-3. Management of repair parts at the strategic level normally depends on the item's general classification rather than its end-item use. Therefore, requisitions in support of a unit's maintenance mission may go to more than one NICP or commodity command. When the end-item is a major system, a program manager ensures that the CSS for that end-item is efficient. In this way, units experiencing problems have a single point of contact to handle their concerns. At this level, supply requirements may drive the NICP manager to use depot-level maintenance to repair unserviceable assets.

OPERATIONAL LEVEL

5-4. The operational level of supply focuses on providing repair parts and a level of stockage for items not sent to the theater by air lines of communication (ALOC). Sustainment maintenance organizations ease the supply requirements by providing serviceable assets and components. Theater-generated assets reduce the requirement to provide support from the strategic level of supply. GS maintenance units' shop stocks support authorized maintenance tasks. They requisition replenishment stocks through their supporting MMCs and do not maintain ASLs.

TACTICAL LEVEL

5-5. Repair parts for the tactical level support both unit- and DS-level maintenance missions. Organizations can stock a limited number of items on the PLL to support their unit-level maintenance mission. Normally, the number of lines is restricted to about 150; however, they should be demand-supported or combat-essential. The commander has some latitude to accommodate expected requirements and other justifiable reasons. Mobility of PLL items is another consideration. The PLL should be 100 percent mobile on organic transportation assets.

5-6. DS maintenance units maintain an ASL based on supported unit anticipated requirements. Maintenance units maintain different quantities of ASL depending on the mission, organizations supported, and organic mobility capability of the organization. GS- and DS-level missile system maintenance units maintain the theater ASL for all supported missile systems. They provide missile parts supply support for the theater.

SUPPLY SYSTEM

5-7. The supply system includes two levels—wholesale and retail. Wholesale supplies are managed at the strategic management level; retail supplies, at the operational and tactical level.

WHOLESALE LEVEL

5-8. The wholesale level includes NICPs, supply depots, arsenals, central wholesale data banks, plants, factories associated with commodity command activities, and special Army activities controlled by USAMC. The wholesale supply system is concerned with procuring supplies from the manufacturer and bringing them into the Army inventory.

RETAIL LEVEL

5-9. The retail level includes all portions of the supply system not classed as wholesale. It is subdivided into user, DS, and GS levels:

- Users are combat, combat support, and combat service support units that stock supplies to support their own operations. These stocks are termed *PLLs* for Class IX and *basic or operational loads* for other classes. Users are also referred to as *customers*.
- DS supply and maintenance units stock supplies for issue to customer units. Stocks at the DS level are called *ASLs*. Each DSU has a list of customer units to which it provides support. Requisition objective and retention levels are set by the DMMC for divisional units or the CMMC/TAACOM MMC for nondivisional units. Stock control and accounting is performed by DSUs.
- GS supply units provide backup supply support to DS supply and maintenance units and act as transshipment points. Stocks at this level are also called *ASLs*. General support supply units are not located in the division; they are found in the COSCOM, TAACOM, and ASCC. GSUs at COSCOM MMC, TAACOM MMC, or ASCC MMC perform their stock control and accounting.

SUPPLY-RELATED ACTIVITIES

5-10. Supply-related activities such as salvage collection points support the retail supply system through their reclamation actions. This is done by removing serviceable or economically reparable components, assemblies, and repair parts from end-items or large components that have been classified as uneconomically reparable.

NOTE

Maintenance and supply must work together to provide, keep, and maintain the authorized amount of equipment in the using unit. If the repair cost exceeds established expenditure limits, the item is turned in, unless approval to retain it is obtained from the appropriate commodity command.

SUPPLY SUPPORT ACTIVITY ORGANIZATION

BATTALION HEADQUARTERS

5-11. Support operations offices have a supply manager and a repair parts manager, who operate under supervision of the support operations officer. These personnel supervise supply support operations of subordinate units, make recommendations relating to repair parts supply policies and procedures, establish controls to fulfill the Class IX mission, and assist other staff officers and units attached to the battalion with supply-related issues. Personnel in this section work closely with the accountable officer in the maintenance company.

MAINTENANCE COMPANY SUPPLY SUPPORT ACTIVITY

5-12. The Class IX SSA mission is performed by a supply platoon composed of a platoon headquarters, a stock control and accounting section, a storage section, and an RX section. The supply platoon maintains the company's ASL and maintenance-related supplies. This ASL includes types and quantities of repair parts authorized for unit-level maintenance activities of supported units, as well as those authorized for support of the DS-level maintenance mission.

Stock Control and Accounting Section

5-13. The stock control and accounting section performs the following functions:

- Maintains stock accounting records and files.
- Receives requests for issue from supported units and from its maintenance elements.
- Edits requests for issue or turn-in.
- Screens its stock records for availability.
- Records issuing of supplies.
- Issues materiel release orders to the storage section.
- Maintains a critical items list and nonstocked items records.
- Assists in compiling RX lists.
- Requests disposition instructions and evacuates materiel as directed.
- Prepares requisitions for replenishment of stocks. (Divisional requisitions are submitted through the DMMC to the COSCOM MMC or, if in the corps or COMMZ, to the COSCOM MMC or TAACOM MMC.)

5-14. This section uses SARSS software for receipt, storage, and issue operations and automated Class IX management. Under SARSS-O (objective), this section uses SARSS-1 to communicate directly with SARSS-2 at the MMC. Under SARSS-2, the MMC assumes stock record accounting and management functions. Information on requisitions, management actions, and status is exchanged daily between SARSS-1 and SARSS-2 sites by diskette or electronic transmission.

5-15. Class IX and RX transactions are normally processed using standard requisition and turn-in documents. ULLS-G facilitates the automated request and issue process between customer and the SSA. Units exchange Class IX information daily between ULLS and SARSS-1 by diskette or electronic transmission. Similar procedures are also used to exchange daily Class IX information between the maintenance company's shop supply section, operating SAMS-1, and SARSS-1.

5-16. The SSA keeps current references on stock accounting supply procedures, including regulations, technical publications, SOP, and policy and procedural guidance and information. As necessary, it provides personnel the references needed to satisfy inspection or technical assistance requirements.

Storage Section

5-17. The storage section physically receives, stores, maintains in storage, and issues required parts and RX items. Supplies are issued in accordance with materiel release orders from the stock control and accounting section. The section is also responsible for safeguarding and storing supplies, for preparing supplies for shipment, and for maintaining proper parts locations.

Reparable Exchange Section

5-18. RX is a repair parts supply procedure by which serviceable repair parts, components, and assemblies are exchanged for unserviceable items, using standard issue and turn-in documents and procedures. Normally, items being exchanged must be reparable or recoverable; however, this procedure is also sometimes used for other types of items whose issue must be controlled. The RX section is established in an area with convenient access to supported units (within or adjacent to the supply office). Under automated procedures, SARSS-1 software accommodates RX operational procedures.

SUPPLY SUPPORT ACTIVITY PROCEDURES

5-19. DS maintenance companies carry a specified level of demand-supported, fast-moving repair parts required for the DS-level maintenance operations and supported unit requirements. Stockage requirements are continually appraised to keep stockage to the minimum required for support requirements and to avoid accumulation of excess stocks.

5-20. Supported units place demands for repair parts and maintenance supplies on the DS maintenance company designated to provide them with support. Figure 5-1 illustrates the Class IX and maintenance-related Class II requisition and supply flow (high-priority ALOC). Figure 5-2 illustrates the Class IX and maintenance-related Class II requisition and supply flow (low-priority ALOC).

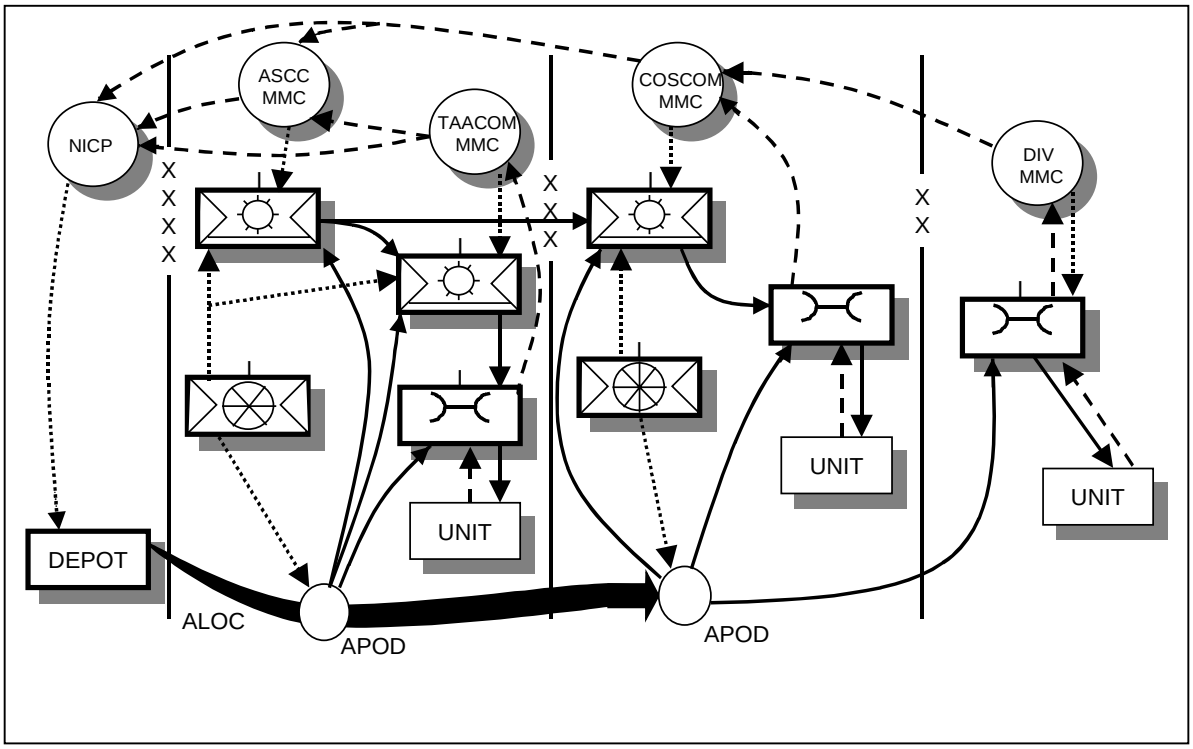

Figure 5-1. Class IX and Maintenance-Related Class II Requisition and Supply Flow (High-Priority ALOC)

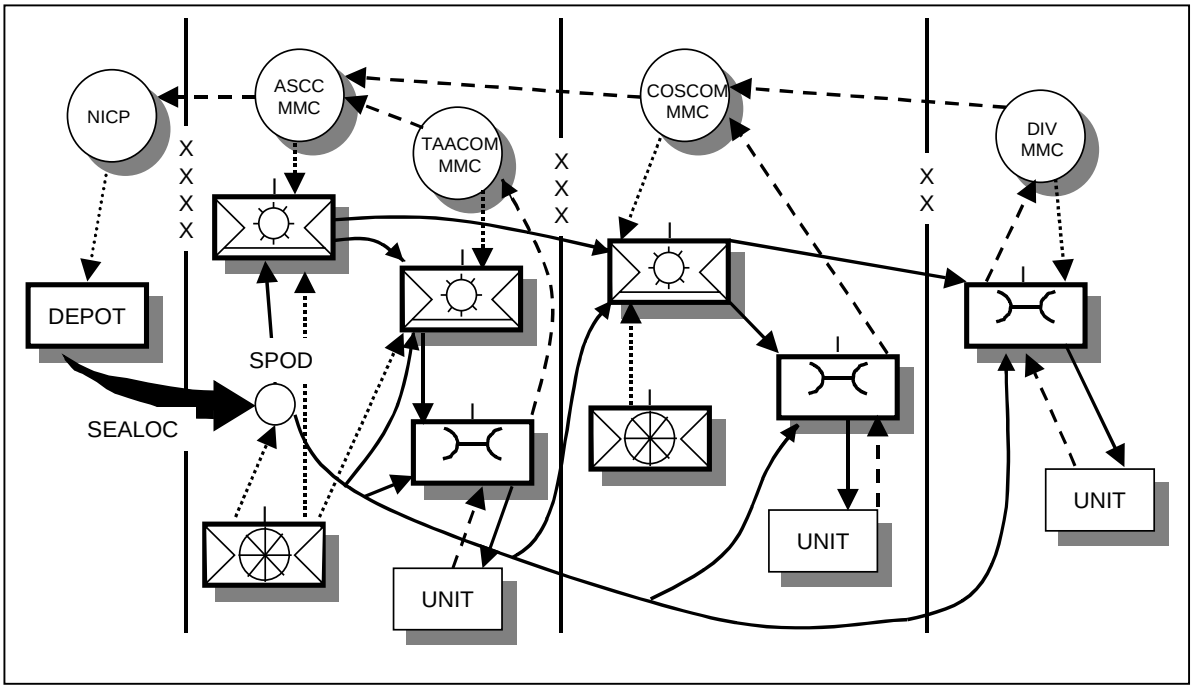

Figure 5-2. Class IX and Maintenance-Related Class II Requisition and Supply Flow (Low-Priority ALOC)

ACQUISITION PROCESS

5-21. Table 5-1 describe the repair parts supply acquisition process.

Table 5-1. SSA Repair Parts Process

Step	Action
1	Receives requests for repair parts from supported units and the company's shop supply element; issues available stocks.
2	Requisitions, through the applicable MMC, items to satisfy unfilled demands from supported units and shop supply and to replenish ASL stocks.
3	Upon receipt, stores repair parts. **NOTE: Unit packs should not be opened for inspection or solely to verify the count.**
4	Passes all available information on to the stock control and accounting section without delay.
5	Performs stock control and accounting tasks, including those tasks previously listed under the stock control and accounting section. See AR 710-2 and the applicable automated system technical manual for processing, controlling, and technical editing procedures.

DISTRIBUTION

5-22. The normal method used to distribute items to supported units is supply point distribution. Supported units are advised when shipments are ready. Units dispatch transportation to pick up their supplies. Arrangements may be made for delivery by requesting transportation from supporting transportation sources. In situations where supply lines are not secure or terrain is impassable, delivery of repair parts may occur by air. Air transportation may also be used to retrograde unserviceable components for repair.

STORAGE

5-23. The storage element provides physical receipt, storage, maintenance-in-storage, and safeguarding. It maintains a locator system and issues items as directed by the stock control and accounting section. Storage personnel also package, crate, and handle items. Units should emphasize proper storage of Class IX during field operations. Unprotected repair parts, components, and assemblies can quickly deteriorate if exposed to dirt and moisture.

5-24. To ensure proper storage, a storage plan must be developed and used for all stocks. The plan must comply with policies established by the company commander, which, in turn, are based on higher headquarters policies. Space available and types, sizes, and quantities of items to be stored are the principal factors to consider when developing a storage plan.

5-25. Most repair parts and maintenance supplies are stored in vehicles organic to the maintenance unit. CONEXES may be used for storage when they are available and their use is authorized. This provides maximum protection with little or no requirement for preparation or processing for storage. Except for glass and other fragile items (windshields, sediment bowl, and so forth), which are subject to breakage in transit, all items received in original packages should be accepted unopened.

5-26. An inspection schedule should be established for stored stock. Unpackaged and unpreserved items should be inspected for rust, corrosion, and broken packs. Particular emphasis must be placed on items with an established shelf life (rubber gaskets, neoprene seals, batteries) to be sure expired-date packages are not issued. All storage practices should be in compliance with safety and environmental laws and regulations.

REPARABLE EXCHANGE

5-27. Items authorized for repair at support maintenance may be supplied through an RX activity (RXA). Supply and maintenance personnel jointly determine selection of RX items for repair. Authority to stock RX and the levels in which these items are stocked is governed by AR 710-2. Items selected are those that are reparable and that have an essentiality code of C and an air eligibility code of 1 or 3, with at least 9 recurring demands in the last 360 days. Stocked items failing to receive at least 3 recurring demands in the previous 360 days no longer qualify for stockage and will be deleted.

5-28. Procedures for customers to obtain an item from the RXA are provided in DA Pamphlet 710-2-1. Items are exchanged on a one-for-one basis using a

DA Form 2765-1 to turn in the unserviceable item and another DA Form 2765-1 to request a replacement. Placing items on the RX list serves two useful purposes:

- First, users do not have to prepare job orders and await repair. The customer simply prepares issue and turn-in documents and hand-carries the item to the RXA where a like item is issued.
- Second, only the supply activity job-orders the components to the maintenance activity for repair. This reduces paperwork and allows the maintenance unit to workload for programmed repair.*

PRESCRIBED LOAD LIST

5-29. TOE units that perform unit-level maintenance are authorized to stock a PLL of repair parts, which helps ensure that parts are on hand when needed. A PLL consists of repair parts and other stocks. The unit PLL consists of unit-level maintenance repair parts that are demand-supported, nondemand-supported, and specified initial stockage for newly introduced equipment. Other items that can be added to the PLL include the following:

- Demand-supported items with essentiality codes other than "C."
- Initial-issue repair parts to support newly fielded equipment (Code "P") items.
- Items added with approval of the first general officer in the chain of command or his designated representative.

5-30. Each unit is responsible for maintaining PLL records, submitting timely replenishment requests, and conducting inventories. All items must be on hand or on order. PLL policy is in AR 710-2. Manual procedures are in DA Pamphlet 710-2-1. Automated procedures are in system user manuals.

AUTHORIZED STOCKAGE LIST

5-31. The ASL consists of those parts stocked in DS maintenance units for issue to user units and to support their own DS level maintenance operations. The MMC, based on priorities established by the commander, will establish the guidelines for issue, ASL design, or distribution. The MMC is the common exit point for requisitions and other supply documents for the division. ASL lines are distributed among the units based on the critical combat needs of customer units. Maintenance companies will stock repair parts that are combat-essential to customer units. Steps in the repair parts process are in Table 5-2.

Table 5-2. Repair Parts Process

Step	Action
1	Units submit repair parts requests to their maintenance company supply support activity.
2	If repair parts are on hand, they are issued. If parts are not on hand, the request is back-ordered and a requisition passed to the COSCOM or TAACOM MMC.
3	The COSCOM or TAACOM MMC prepares the MRO, back-orders the requisitioned item, and passes the requisition to a higher supply source.

Step	Action
4	When issues are made by the COSCOM or TAACOM MMC, the parts are shipped to the maintenance company with the ASL.
5	The maintenance company will report receipt of parts to its supporting MMC.
6	The maintenance company supply section places items in a storage location (for ASL replenishment) or releases them to the customer if the request was a passing action.
7	The DMMC directs the forward movement of ASL stocks held by the maintenance company whenever replenishment (of the forward maintenance companies' ASL) is needed or to satisfy critical needs of customers.

WEAPON SYSTEM REPLACEMENT

5-32. Weapon system replacement operations (WSRO) is a management tool used to supply the combat commander with fully operational major weapon systems, including both the required equipment and trained crews. Procedures for issue of weapon systems differ from those for other Class VII items. Weapon systems replacement is managed at each level of command. Weapon systems managers are generally appointed as indicated below:

- Battalion—XO.
- Brigade—XO.
- Division—assistant DMMO (DMMC).
- Corps—COSCOM MMC.

Two terms often used to describe WSRO are *ready-for-issue* and *ready-to-fight*.

READY-FOR-ISSUE WEAPON SYSTEM

5-33. A ready-for-issue weapon system is one that has been removed from its preservation status and made mechanically operable according to current equipment serviceability criteria or other appropriate standards. Additional equipment, such as fire control, machine guns, radio mounts, and radios, is installed. The vehicle has been fueled and basic issue items (BIIs) are aboard.

READY-TO-FIGHT WEAPON SYSTEM

5-34. A ready-to-fight system is one that is manned and ready-for-issue with ammunition stowed aboard. The weapon has been boresighted and verified. Transportation of weapon systems to corps normally occurs by rail. Systems are shipped to division by rail or HETs and to battalions by HETs.

LOGISTICS INTELLIGENCE FILE

5-35. The LIF is an on-line, computerized database that centralizes the collection, correlation, and retrieval of supply and transportation data on Army-sponsored requisitions placed in the wholesale logistics system.

NOTE

The database does not include Class I (subsistence), Class III (bulk petroleum), Class V (ammunition), and security assistance materiel.

5-36. The LIF unites the supply and transportation function systems through the following three basic conditions essential to logistic intelligence:

- Automation of the standard supply and transportation systems, MILSTRIP and MILSTAMP.
- Electronic transmission of requisition, status, receipt, and transportation lift notices and receipt postings.
- Automatic acquisition of essential data from the Defense Automatic Addressing System (DAAS).

5-37. The LIF provides—

- A single source of logistic intelligence.
- A single source of determining the status of a requisition placed against the wholesale system.
- A capability of diverting, reconciling, expediting, or suspending items or shipments on short notice.
- A reconstitution of shipments involved in casualties on aircraft, ships, or other conveyances.
- A way of informing requisition activity commanders of shipment delays due to labor disputes, natural disasters, or other causes.
- A way of informing requisition activities commanders of equipment and lift data.
- A mass cancellation service in coordination with other commands and activities.
- Special analysis and LIF products tailored to customer needs.

AR 725-50 outlines specific details of LIF use.

SECTION II – OTHER SUPPLY SOURCES

5-38. Section II discusses alternative sources of repair parts supply.

CANNIBALIZATION

5-39. Cannibalization is the authorized removal of serviceable and unserviceable assemblies and serviceable repair parts from unserviceable, uneconomically reparable, or excess end-items of equipment authorized for local disposal.

ON THE BATTLEFIELD

5-40. When done on the battlefield, cannibalization's final aim is to return as many weapon systems and tactical support systems to the battle as quickly as possible. Cannibalization supplements and supports supply and RX operations by providing assets not available through other sources. On the battlefield, the MMC maintains visibility of all cannibalization-eligible equipment in order to direct these operations.

5-41. Cannibalization operations fall into two general categories:

- Cannibalization point operations conducted by the C&C service company. This provides repair parts and assemblies for immediate use, repair parts and assemblies for stockage, and unserviceable components and assemblies for GS-level repair. Operations are conducted in accordance with DA Pamphlet 710-2-2.
- Battle support cannibalization conducted by maintenance personnel in accordance with established procedures, usually in response to immediate tactical requirements. This is done only for returning equipment to combat, not for repair parts stockage.

BATTLE SUPPORT PROCEDURES

5-42. Battle support cannibalization procedures are based on policy guidance from corps and ASCC. These procedures are designed to support maintenance operations. The goal of battle support cannibalization is to return a maximum number of weapon systems and tactical support systems to units for their immediate tactical requirements. Table 5-3 shows procedures for possible incorporation into a battle support cannibalization policy.

Table 5-3. Battle Support Cannibalization Procedures

Equipment Category	Authority	Action
Abandon/ destroy	Corps/division commander	Equipment is destroyed to prevent enemy capture (only when recovery or evacuation is not feasible). The division commander has authority to abandon/destroy equipment but may delegate authority to lower commands. Before destruction, sighting and fire control equipment and other critical items are removed and evacuated. When possible, maintenance personnel conduct cannibalization, then destroy the item.
Obvious Code H (Salvage)	Senior maintenance person	Maintenance personnel remove critical repair parts and assemblies in short supply. Parts from the cannibalized item are used first to conserve parts in the supply system. Following cannibalization, the item is abandoned, destroyed, or recovered/evacuated at low priority.
Reparable at unit level	Tactical unit commander (item meets criteria set by division commander)	Controlled exchange should be used to the maximum extent possible. When cannibalization of unit-level parts contributes to increasing the number of weapon systems available for the immediate tactical requirement, organizational maintenance personnel request cannibalization authorization from the tactical commander concerned.
Reparable at FSB (BSA)	Tactical unit commander (item meets criteria set by division commander)	Controlled exchange should be used to the maximum extent possible. When cannibalization of DS-level maintenance parts contributes to increasing the number of weapon systems for the immediate tactical requirement, DS-level maintenance personnel request authorization from the tactical commander concerned. The cannibalized item is repaired at the earliest opportunity.
Reparable at MSB (DSA)	Maintenance control officer	Controlled exchange should be used to the maximum extent possible. Cannibalization decisions in the DSA are coordinated by the maintenance control officer with the division WSRO. Only parts needed for immediate requirements should be removed. The cannibalized item is repaired at the earliest opportunity.
Reparable at general support	Maintenance control officer	Controlled exchange should be used to the maximum extent possible. Cannibalization decisions should be coordinated with the supporting GS maintenance unit. Only parts needed for immediate requirements should be removed. Following cannibalization, equipment is evacuated to GS-level maintenance.

WARTIME POLICY

5-43. During war and transition to war, the Army service component commander must establish a cannibalization policy. Waivers of NICP disposition requirements must be coordinated with the NICP concerned. Corps and division commanders implement the theater policy. Cannibalization point operations remain the same as during peace. When items have been authorized for disposal, maintenance personnel remove parts and components. Serviceable items are made available for issue. Unserviceable reparable items are work-ordered for repair.

5-44. After selected recoverable items are removed, the cannibalization point makes the end-item available for further supply action. Lists of end-items available for cannibalization are periodically provided to supported customers. Customers bring requisitions to the cannibalization point where issue is made on a fill-or-kill basis.

PEACETIME POLICY

5-45. Peacetime policy guidance is contained in AR 710-2, AR 750-1, and DA Pamphlet 710-2-2, which deal with cannibalization point operations. NICP approval is required before weapon systems may be cannibalized. CONUS cannibalization points are normally set up at installations with fixed maintenance facilities.

UNAUTHORIZED CANNIBALIZATION

5-46. Unauthorized cannibalization during peacetime operations degrades readiness. Commanders and maintenance leaders should avoid this practice and correct all violations. Leaders should also ensure that cannibalization is not performed under the disguise of controlled exchange. This happens when unserviceable components are not replaced on, or affixed to, the donor end-item.

FABRICATION

5-47. When a critical part is not available through the supply system, it may sometimes be fabricated locally by direct support maintenance units. A DA Form 2407 is annotated with specifications, and a sample item, if available, is provided.

CONTROLLED EXCHANGE

5-48. Controlled exchange is the removal of serviceable parts, components, assemblies, and subassemblies from unserviceable, economically reparable equipment for immediate use in restoring a like item of equipment to a combat mission-capable condition. Controlled exchange—

- Expedites repair and return to user in support of materiel readiness or operational effectiveness.
- Is performed by using units and support maintenance organizations.

Controlled exchange ensures that unserviceable yet reparable components are recovered and repaired.

5-49. During combat or transition to war, major Army commanders may modify the conditions in which controlled exchange is performed. Controlled exchange and cannibalization will not apply to end-items that have been involved in accidents until they have been formally released by the investigating officer. The document register, due-in records, and records of demands must be adjusted when controlled exchange is used. Specific procedures for controlled exchange should be in the unit maintenance SOP. Circumstances under which controlled exchange is authorized are outlined in AR 750-1.

LOCAL PURCHASE

5-50. Local purchase is a source of supply that may be used to procure items required to satisfy immediate needs. The supporting SSA accountable officer is the approving authority for local purchase. The servicing finance unit supplies funds for local purchase either directly or through a Class A agent or imprest fund cashier. The advent of unit credit cards has facilitated local purchase of repair parts; however, caution must be used in their application. Procedures and conditions that must exist are contained in AR 710-2.

Chapter 6

Recovery and Other Supporting Maintenance Actions

Chapter 6 discusses recovery, collection and classification, evacuation, retrograde, and battle damage assessment and repair of Army materiel. Equipment must be retrieved, sorted, repaired, and, if feasible, returned to use. When equipment cannot be repaired on site, it must be moved to the maintenance activity best suited to repair it. This is done by recovery and evacuation. It is an owning unit's responsibility to recover equipment to its supporting maintenance activity, which either repairs the item or evacuates it to another activity for repair. When transportation requirements exceed the maintenance unit's capability, the unit requests transportation support from the DISCOM MCO or corps or theater movement control team. Applicable references for recovery training, operations, and procedures are in FM 9-43-2 and TC 43-35.

SECTION I – RECOVERY

6-1. Section I discusses recovery operations. Recovery is the process of retrieving or freeing immobile, inoperative, or abandoned materiel from the point where it was disabled or abandoned. The materiel is returned to operation or to a place where it can be repaired, evacuated, or otherwise disposed of. Recovery—

- Returns immobilized equipment to operation.
- Retrieves equipment for repair and return to the user.
- Prevents enemy capture of equipment.
- Uses enemy equipment to support United States and friendly forces intelligence.

RESPONSIBILITY

6-2. Recovery is a using-unit responsibility. In units below the battalion level, where maintenance assets are authorized, the motor sergeant, motor officer, or other designated individual manages recovery operations. In units where maintenance resources are concentrated at the battalion level, the BMO manages recovery operations. Recovery operations in CS or CSS units can be either a battalion or individual company responsibility.

6-3. Maintenance units are responsible for recovering their own organic equipment and providing limited backup support with organic wreckers or tracked recovery vehicles when requirements exceed a supported unit's maintenance capability. They may also be tasked to provide recovery support on an area basis to units without a recovery capability.

MANAGEMENT

6-4. The BMO or unit motor officer (depending on type of unit) coordinates recovery operations with the overall repair effort and available resources to support the commander's priorities and the tactical situation. The goal is timely return of equipment to operation with the least expenditure of resources. The following general principles apply to management of recovery operations:

- Centralize management of recovery operations at the battalion level whenever possible. This does not preclude delegation of recovery authority for specific operations to the company maintenance team (CMT).
- Coordinate recovery operations with the maintenance effort. Maintenance personnel repair equipment as far forward as possible within the limits of the tactical situation, amount of damage, and available resources. Use maintenance time guidelines established by the commander to make repair-or-recovery decisions. The estimated repair time helps determine to which maintenance activity the item should be recovered.
- Use the right recovery equipment for the recovery mission. Tracked recovery vehicles normally recover tracked equipment while wheeled wreckers normally recover wheeled vehicles. When a unit has only limited assets, it is very critical to select the right recovery vehicle for the mission.
- Do not return recovery vehicles to the rear. Instead, keep them available as far forward as the tactical situation permits. This keeps them available for immediate response as needed. The BMO coordinates recovery and evacuation requirements and may request additional support from the direct support maintenance company MST or the support battalion support operations section.
- Coordinate recovery missions with the tactical commander during all combat operations.
- Establish recovery priorities when recovery assets are limited. These depend on the commander's need for an item and the tactical situation. The type of maintenance or repair required will also affect the priority when two or more like items must be recovered. As a general rule, always recover weapons systems before tactical vehicles.

INITIATION

6-5. Table 6-1 outlines procedural steps for equipment recovery.

Table 6-1. Equipment Recovery Procedures

Step	Action
1	When the equipment operator and crew detect an inoperable condition, they should— • Assess the damage and cause of the inoperable condition. • Initiate action based on their analysis and the tactical situation.

Step	Action
2	Operator/crew/organizational maintenance personnel use organic repair and recovery capability, including— • BDAR techniques. • Self-/like-vehicle recovery. • Assistance from other units on site when unit-level recovery resources are insufficient.
3	Unit requests assistance from the recovery support section located in the UMCP. Requests must provide the following information: • Unit identification. • Equipment identification. • Location (map coordinates, when possible). • Nature of disability. • Evaluation of on-site repair capability. • Repair parts required. • Organic recovery capability. • Tactical situation and security requirements. • Recommended route of approach. Until equipment is recovered, operator/crew must remain with the equipment and follow unit standing operating procedures.
4	Once operator and crew initiate SOP/corrective measures, they should— • Take cover. • Provide local security. • Wait for assistance. • Assist maintenance/recovery personnel on their arrival with the recovery action.

REPAIR AND RECOVERY PLAN

6-6. The BMO, unit motor officer, or motor sergeant (depending on the type unit), develops a plan of action for repair and recovery of the disabled equipment based on the request for assistance.

ACTION PLAN

6-7. The BMO, unit motor officer, or motor sergeant (depending on the type unit), develops an action plan that includes evaluation of—

- Extent of damage or system failure at the breakdown site.
- Established priority for support.
- Tactical situation.
- Workload.
- Availability of maintenance and recovery personnel.
- Availability and maintenance status of recovery equipment.

CHECKLIST

6-8. The BMO assigns the repair/recovery mission to the CMT. The CMT is provided a unit checklist containing the following information:

- Breakdown location and grid coordinates.
- Cause of the breakdown.

- Specific designation of required support:
  - Personnel by rank and MOS.
  - Equipment by LIN, NSN, and quantity.
- Supply requirements—required classes of supply:
  - Class I (rations and water).
  - Class III.
  - Class V (by type and quantity).
  - Class IX (by part and quantity).
- Tactical situation:
  - Road and movement restrictions.
  - Primary and alternate routes of march.
  - METT-TC and special security or NBC defense requirements.
  - Individual clothing and equipment and NBC defense items.
  - Equipment and supplies to decontaminate the disabled vehicle.
- Communications equipment availability, including applicable call signs, primary and alternate frequencies, and required reports.
- Security and safety requirements.
- Applicable special instructions regarding the disposition of contaminated equipment, contingency plans, and any special tactical or security considerations.

SPECIAL CONSIDERATIONS

6-9. Recovery of abandoned or unmanned equipment requires special training and special consideration:

- Recovery personnel must be trained to identify contamination and search for boobytraps.
- When chemical contamination is suspected, recovery personnel must wear MOPP.
- Recovery personnel will also be trained to clear or disarm the weapons systems of supported equipment to prevent accidental discharge.

ABANDONED EQUIPMENT

6-10. Once the CMT makes the equipment safe, it proceeds with the recovery operation. The equipment is inspected to assess the damage and determine repair or recovery requirements. The CMT reports findings and the situation to the BMO. The BMO may direct repair or recovery of equipment, or it may send additional parts or personnel. The CMT proceeds with repair/recovery as directed.

6-11. If the BMO cannot be contacted, the CMT proceeds with the original plan or modifies it based on judgment, commander's priorities, and the unit SOP. During defensive operations CMTs recover equipment to the first terrain feature. From there they coordinate its removal to the UMCP. However, this should be done only if the equipment cannot be repaired at the forward MCP. During offensive operations, MSTs recover to the MSR. From that point maintenance platoon personnel pick up the equipment as they move forward.

RECOVERY DESTINATION

6-12. The following items may influence the CMT's ability to recover equipment to a destination:

- Tactical situation.
- Recovery vehicle requirements.
- Workload.
- Available resources at the unit MCP and the supporting maintenance unit.
- Extent of repairs required.

Logisticians use maintenance time guidelines established by the commanders in conjunction with these factors to decide which maintenance activity can best make the repair. The bottom line is to repair the equipment as far forward as possible using the least amount of maintenance resources.

NIGHT AND LIMITED VISIBILITY

6-13. Sometimes the tactical situation prevents access to disabled equipment. When that occurs, the BMO must carefully weigh the potential benefits of recovery against the possible loss of personnel. This is particularly true during night operations when the need for noise and light discipline further complicates the recovery process.

6-14. In general, recovery operations at night or during limited visibility are the same as during daylight. Recovery elements may require night vision devices and additional personnel assistance for ground guides. In some cases, the mission may require the tactical commander to approve the compromise of light and noise discipline. When tactical elements are conducting night or limited-visibility operations, maintenance units must anticipate a potential increase in workload.

FOREIGN MATERIEL

6-15. Responsibilities for recovery and evacuation of foreign equipment and materiel at various levels are similar to those for US materiel. Capturing units report the discovery of foreign materiel through intelligence channels. Items for which there are no disposition instructions should not be evacuated until coordinated with technical intelligence elements.

6-16. The capturing unit may be directed to evacuate the item to the C&C service company or the supporting technical intelligence unit. Or the unit may be told to guard it and leave it in place for on-site preliminary examination by technical intelligence personnel. When materiel does not need to remain in place for intelligence evaluation and the discovering unit is incapable of evacuating it, the unit may request recovery and evacuation assistance directly from the support battalion responsible for DS-level maintenance.

GENERAL EQUIPMENT

6-17. Handle electronically sensitive equipment, items easily damaged by weather or handling, pilferable items, and high-cost, low-density equipment with a special degree of care and security. Using units must turn in such

items directly to the supporting maintenance company. MSTs from the maintenance unit must transport equipment when feasible. The maintenance company repairs these items within its capability and evacuates the remainder as directed by the MMC.

EXPLOSIVE ITEMS

6-18. The presence of ammunition and explosives often complicates recovery. Personnel must remain constantly alert and should presume abandoned items are booby-trapped. Exercise caution to prevent explosion, fire, or accidental weapon discharge. When unexploded ammunition such as bombs, explosive projectiles, or boobytraps is found or suspected, request assistance from an EOD team.

6-19. If quantities of abandoned ammunition are found during recovery operations, leave the ammunition in place and notify the nearest EOD unit immediately. Do not, *under any circumstances*, attempt to touch or move abandoned ammunition.

OPERATIONS IN AN NBC ENVIRONMENT

6-20. Nuclear, biological, and chemical contamination of personnel and equipment make maintenance operations more difficult and time-intensive. Automatic chemical alarms on vehicles do not react fast enough to prevent passengers from receiving incapacitating doses of a chemical agent. Therefore, vehicle movement in a potential NBC environment normally occurs in full MOPP.

6-21. Although training extends soldiers' ability to operate effectively in MOPP, they eventually reach a physical and psychological limit. Since continuous wearing of full MOPP may hinder the recovery mission, a uniform modification may become necessary. Commanders make decisions based on the following variables:

- Chemical threat to the unit's mission.
- Unit vulnerability to future chemical attacks.
- Reaction time of unit personnel.
- Time required to don protective clothing.
- Types of potential threat agents.
- Weather conditions.
- Work rate.

6-22. Water, solvents, and petroleum products degrade the protective quality of MOPP garments. When the mission permits, individuals should replace protective clothing. Units operating in an uncontaminated area must establish NBC inspection points to monitor recovered equipment entering the area. Process contaminated vehicles through a decontamination station, or leave them downwind in a holding area away from the unit for weathering and decontamination. Label all chemically contaminated equipment and repair parts.

CONTAMINATED EQUIPMENT

6-23. If practical, decontaminate and recover equipment previously contaminated by NBC agents. Both using units and supporting maintenance units have chemical agent detection kits and radiometers to detect chemical and nuclear contamination. If the item cannot be decontaminated and the contamination is severe enough to prevent recovery and evacuation, then carefully note the location of the item. Coordinate through the battalion headquarters for decontamination or disposal instructions. Ensure maintenance unit SOPs include instructions on recovering and evacuating contaminated materiel.

HAZARDS

6-24. Table 6-2 lists hazards of recovery and precautions to take concerning them.

Table 6-2. Recovery Hazards

Hazard	Action
Wire rope and cables	Personnel handling wire rope and cables must exercise caution. Frayed cable can cause serious injury, whether static or moving. Wear heavy leather-palmed gloves and handle cables carefully.
Rigging	Inspect equipment before the recovery operation begins. Shut off engines and apply brakes to prevent movement. Ensure rigging lines do not cross or rub against each other. Cross cables only when towing a disabled vehicle.
Disabled vehicles	Before hooking up or unhooking a tow bar or disconnecting any drive parts, chock the disabled vehicle with blocks so that it can not move during the hooking and unhooking procedure. Failure to block disabled vehicles can result in serious damage or injuries. See FM 9-43-2 for proper procedures.
Backlash	During winching operations all personnel must stand clear of the wire rope a distance of the cable length plus two feet. Snapped wire cables can cause serious injury. Operators and other personnel assisting in the recovery effort should keep their hatches closed and use periscopes to view hand signals directed to them by ground guides. To eliminate confusion, use only one ground guide.
Gun tubes	Position the main gun tube in a manner that avoids damage to personnel and equipment. If the gun tube of a disabled tank collides with the recovery vehicle, have it examined by DS-level maintenance personnel before firing.
Armed weapon systems	Recovery crews should know how to make weapon systems safe in an emergency. Get immediate help from the supporting EOD unit.

SECTION II – COLLECTION AND CLASSIFICATION

6-25. Section II discusses collection responsibilities and UMCP setup responsibilities. The UMCP is a geographical area containing maintenance resources that allow maintenance support to adapt to the three-dimensional battlefield. Organizational and DS-level maintenance personnel perform required repairs designed to return maximum numbers of weapon systems to the battlefield. Repairs are designed to keep the force at maximum combat strength for the current battle and the next battle. The UMCP is the integration point of the *fix forward* concept. From the UMCP, logisticians coordinate and manage maintenance operations and resources to support the warfighting effort.

BATTALION MAINTENANCE OFFICER

6-26. The BMO has overall responsibility for maintenance operations. Directly responsible to the battalion executive officer, the BMO stays informed of the task force battle plan and coordinates maintenance efforts to support those operations. The BMO directs the CMT to place recovery assets forward to support warfighting units. In turn, those assets support the recovery of equipment to the UMCP for repair. The BMO further ensures—

- The DS MST coordinates requirements with the maintenance control offcier.
- The BMT understands the support priority and manages maintenance in the forward area of the battlefield.
- The BMT gives maintenance resource priority to forward fighting elements.
- Soldiers from the maintenance service section (MSS) reinforce the CMT.

SETTING UP AND POSITIONING A UMCP

6-27. The UMCP is located on the battlefield in the combat trains area. The BMO must coordinate with the S4 in site selection. Locate the UMCP in an area that facilitates effective radio communication with the CMT. Consider METT-TC in the overall determination and—

- Locate as far to the rear as communications allow during defensive operations.
- Locate as far forward as possible during offensive operations (preferably behind a terrain feature such as a hill mass out of range of enemy mortars).

DS MAINTENANCE COLLECTION

6-28. Maintenance or supply personnel inspect material, report its quantity and condition, and perform processing necessary for further repair or evacuation. There will be wide diversity in the types and condition of materiel brought into the collection points. Procedures must be established to control incoming materiel and to direct it to specific locations within the collection point area. This will aid in inspecting, classifying, and processing

items for repair or movement to the rear. DS maintenance units will inspect evacuated mechanical and electronic materiel and dispose of it as follows:

- Report equipment requiring no maintenance or no more than GS maintenance to the MMC; ship it to the supporting DS/GS maintenance facility or supply activity based on the MMC's disposition instructions.
- Report equipment requiring depot maintenance or considered a candidate for property disposal to the MMC; ship it to the supporting C&C point based on the MMC's instructions.
- Deliver US medical and cryptographic equipment to the supporting medical or signal activity.
- Do *not* send containers of chemical agents, ammunition, explosives, or aircraft to C&C service companies; instead, report them to the MMC for disposition instructions.
- Repair only those items directed by the MMC (friendly forces may not require such equipment even if it can be repaired).

MATERIEL CLASSIFICATION

6-29. United States and foreign materiel returned to a maintenance unit is of no value until it is inspected, classified, and reported. Classifying materiel through close inspection allows the condition code of an item to be established. Classification, which indicates the physical condition of the returned materiel, is necessary to determine the proper disposition of an item. It identifies the extent of repairs required (if repairs can be accomplished) and whether the item is worth repairing. The objective is the efficient, rapid return to use of the greatest amount of materiel.

6-30. At DS-level maintenance, qualified technicians inspect materiel IAW instructions and specifications in technical manuals, technical bulletins, and MMC directives. The inspection's results establish the materiel's condition code (classification). The classification complies with instructions in technical manuals, technical bulletins, and MMC directives. A complete listing of condition codes is given in AR 725-50.

SECTION III – EVACUATION

6-31. Section III discusses evacuation principles and responsibilities. The purpose of evacuation is to move damaged equipment from one maintenance unit to another (normally a maintenance unit with a higher-level capability). An important logistics function, evacuation also moves disabled materiel into the logistics support system. Evacuation—

- Reduces the maintenance backlog at a location.
- Moves damaged equipment to a maintenance activity that can repair it.
- Maximizes use of critical supplies and equipment.
- Matches the maintenance workload with maintenance resources.

PRINCIPLES

6-32. Logisticians manage evacuation to return the maximum number of serviceable items to using units or to the supply system. This requires close coordination of recovery, repair, and transportation:

- Evacuate equipment to the designated maintenance activity immediately after recovery.
- Make maximum use of road and railway networks.
- Evacuate by the fastest means available.
- Prioritize equipment for evacuation; evacuate critical warfighting items first.
- Streamline the evacuation process; ensure disposition instructions move equipment to the supporting activity best suited to repair it.
- Maximize use of available transportation; use vehicles to backhaul unserviceable assemblies and end-items on the return trip.
- Prevent further damage to equipment; protect it from damage in transit and from the elements with packaging, bracing, and preservation materials.

RESPONSIBILITY AND CONTROL

6-33. Each commander is responsible for evacuating unserviceable materiel as rapidly and efficiently as possible. Major commands publish evacuation policies through their MMC. The movement control team requests transportation to evacuate unserviceable materiel from one maintenance unit to another.

6-34. The ASCC MMC, in conjunction with subordinate MMCs, controls the flow of unserviceable materiel from the time of recovery until final disposition. ASCC logisticians establish general evacuation policies. In turn, subordinate commanders develop detailed standards and procedures based on ASCC policies. This ensures organizations processing unserviceable materiel have definitive disposition instructions.

6-35. Evacuation success depends largely on instructions supplied to maintenance companies by the MMC. These instructions must be complete,

timely, and seek to eliminate all unnecessary handling. If proper evacuation instructions have been issued by higher headquarters, the condition and classification of each item will determine destination. Automatic disposition instructions are used to the maximum extent possible to avoid undue delay.

SECTION IV –RETROGRADE AND RECLAMATION

6-36. Section IV discusses procedures for retrograde and reclamation operations. Overseas commands return (retrograde) materiel to CONUS. Retrograde cargo normally consists of unserviceable, economically reparable items and weapon systems destined for depot repair. Reclamation operations involve the removal by collection and classification units of serviceable or economically reparable components, assemblies, and repair parts from end-items or large components classified as uneconomically reparable. Reclamation operations significantly reduce demands on the supply system.

RESPONSIBILITY

6-37. The various areas of responsibility for retrograde operations are listed below:

- The ASCC materiel management center in coordination with CONUS commodity commands establishes the type, quantity, and condition of equipment for retrograde.
- The MMC develops and publishes criteria for maintenance units. Materiel managers identify retrograde items as far forward as practical to prevent unnecessary handling and shipment.
- In some cases, the DS-level maintenance unit can make the inspection and decision to retrograde. In other instances, GS-level maintenance units make this determination.
- When required, the MMC publishes updated lists of items to be retrograded with the quantity and destination of each. They also coordinate transportation requirements for retrograde cargo.
- The MMC coordinates and directs all retrograde shipments.

PROCEDURES

6-38. Customer units may requisition Class IX repair parts from their supporting collection and classification unit. Table 6-3 gives an example of how materiel (a tank, combat) is reclaimed, based on the assignment of a serviceable, reparable, or uneconomically reparable condition code by DS-level collection and classification units.

Table 6-3. Materiel Reclamation Procedures

Serviceable Item	Reparable Item	Uneconomically Reparable Item
The serviceable engine of an otherwise destroyed tank is placed back into the supply system.	The unserviceable yet reparable transmission of the destroyed tank is directed to the proper maintenance activity for repair and eventual return to the supply system.	The totally destroyed hull of the tank is directed through the property reutilization office as scrap.

SECTION V – BATTLE DAMAGE ASSESSMENT AND REPAIR

6-39. Section V discusses BDAR actions and training requirements. BDAR is rapid damage assessment and repair, bypassing or jury-rigging components, to restore minimum essential capability to support a combat mission or enable self-recovery. Such enabling repairs may be temporary or permanent, depending on the repair required. In many cases, they may not restore full mission capability. BDA determines damage and reparability, the assets needed to make the repair, and where the repair should take place. Battle damage repair (BDR) includes any expedient action that returns a damaged part or assembly to mission-capable or limited mission-capable condition. The purpose of BDAR is to return disabled combat equipment as quickly as possible to the tactical commander.

BDAR ACTIONS

6-40. BDAR actions include—

- Using shortcuts to install or remove parts.
- Modifying and installing components designed for other vehicles or equipment.
- Using parts serving a noncritical function on a like vehicle.
- Jury-rigging to bypass noncritical components.
- Cannibalizing critical repair parts.
- Fabricating critical parts.
- Using substitute fuels, fluids, or other petroleum, oils, and lubricants (POL).

All repairs are made IAW applicable BDAR technical manuals and available BDAR kits. At the completion of immediate combat operations, mechanics will make repairs that will return the equipment to fully mission-capable status IAW appropriate vehicle TM.

6-41. Anyone on the battlefield can perform some BDAR. However, crew, organizational and DS-level mechanics and technicians must be trained in assessing battle damage in addition to their specialties. The operator/crew performs initial BDA and repairs the damage if possible. The commander decides whether or not to use BDAR in lieu of normal maintenance procedures. Since it may not be possible to train BDAR techniques in peacetime using actual equipment, the best substitute is to train system-oriented crews and mechanics to understand the theories and principles associated with weapon systems.

BDAR TRAINING

6-42. All soldiers associated with a piece of equipment, from the operator through the direct-support-level maintenance mechanic, must be trained and proficient in the conduct of BDAR operations. The operator/crew must be able to perform initial BDA and repair damage if possible. CMT members must also be proficient in BDAR techniques. A good reference is FM 9-43-2,

designed for use by operators and by organizational and DS-level maintenance personnel. BDAR technical manuals—

- Provide a single document for each weapon system that contains proven, effective techniques. They are not meant to be all inclusive and are no substitute for an experienced mechanic who understands how a weapon system moves, shoots, and communicates.
- Are used by operators and by organizational and DS-level maintenance personnel. They have been developed for major weapons systems and are issued with the normal complement of technical manuals.
- Have also been developed for tactical wheeled vehicles as well as for combat weapon systems.
- Have the same first eight digits as other 9-series technical manuals followed by the letters "BD" (the BDAR manual for the M1 tank is TM 9-2350-200-BD-1).

Chapter 7

Test, Measurement, and Diagnostic Equipment Maintenance Support Operations

Chapter 7 describes TMDE maintenance doctrine. It also discusses—

- The Army's doctrine for TMDE calibration and repair support (C&RS). It provides an overview of how TMDE C&RS integrates corps contingency operations doctrine as described in FMs 100-5 and 100-10.
- The management structure of the DA TMDE C&RS program and describes the mission, employment, responsibilities, and functions of subordinate TMDE elements.
- Wartime and SASO TMDE C&RS support to meet theater-specific requirements and the means for ensuring accurate and traceable measurements.

SECTION I – TMDE MAINTENANCE SUPPORT

7-1. TMDE is a collection of equipment used to test, through measurement accuracy, another piece of equipment or system. The DA TMDE C&RS program is based on AR 750-43 guidance. This Army regulation specifies policies and responsibilities for TMDE maintenance support and life cycle management. The regulation also identifies unit TMDE support coordinators' functions and responsibilities.

7-2. Types of TMDE range from torque wrenches in a toolbox to complex equipment supporting sophisticated weapons systems. TMDE is found in every commodity and system; every Army unit has TMDE. The TMDE C&RS program supports several parameters, including—

- Infrared.
- RADIAC.
- Direct current and low frequency items.
- Microwave.
- Mechanical items.

TMDE is generally recognized as special purpose (SP) or general purpose (GP). TMDE-SP is normally developmental in nature for a specific weapon system; TMDE-GP is normally commercial off-the-shelf (COTS) with a variety of applications.

PROGRAM OBJECTIVES

7-3. The objective of the TMDE C&RS program is to make sure accurate and serviceable TMDE is available. The TMDE C&RS program continuously maintains measurement accuracy.

MANAGEMENT AND CONTROL

STRUCTURE

7-4. Department of the Army staff supervision for the TMDE program is assigned to the Deputy Chief of Staff for Logistics. US Army Materiel Command (AMC) manages the TMDE program via the US Army TMDE Activity (USATA). The USATA is a subordinate element of the US Army Aviation Missile Command (AMCOM). USATA provides administrative and technical support to the Army's TMDE program and conducts research in precision measurement (metrology) technology.

7-5. During wartime/deployment, AMC exercises theater command and control of the TMDE maintenance company, either through the LSE or another theater asset. The unit of attachment exercises operational command and control of area TMDE support teams (ATST) attached out from the TMDE maintenance company headquarters. During both wartime and peacetime operations, the USATA continues to provide technical and materiel support to TMDE elements worldwide.

MEASUREMENT TRACEABILITY

7-6. Measurements are traceable using standards whose values have known relationships to national standards. These known relationships constitute an unbroken chain of comparisons with higher-level standards of accuracy. The US Army Primary Standards Laboratory (USAPSL), the Army's highest level of measurement accuracy, provides primary-level (P-level) calibration. Frequency and time measurements, however, are compared with measurements traceable to the US Naval Observatory. Figure 7-1 shows the hierarchy of TMDE traceability channels for measurement accuracy.

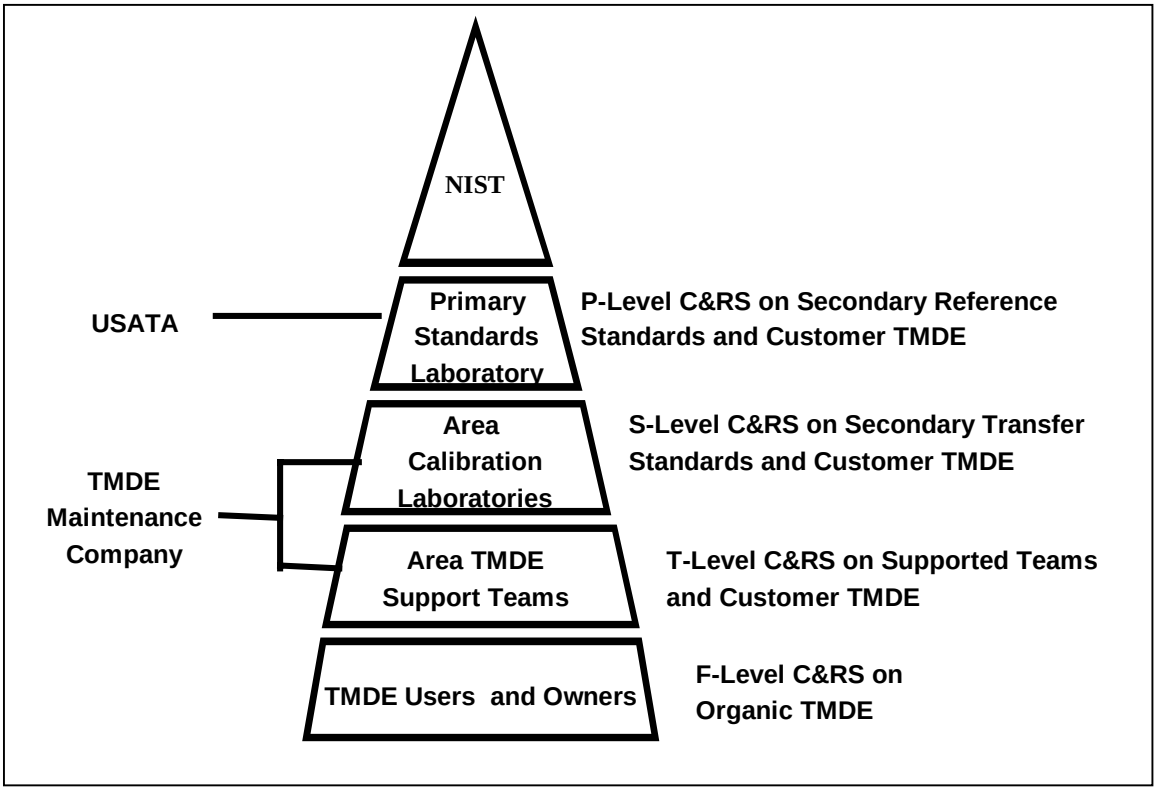

Figure 7-1. Hierarchy of TMDE Traceability Channels

INFORMATION MANAGEMENT

7-7. The TMDE C&RS uses the TMDE Integrated Materiel Management System (TIMMS) to manage TMDE information. TIMMS—

- Is an automated database system. It provides TMDE information to TMDE support elements to manage their mission. TIMMS processes C&RS information to control scheduling, workload, and personnel.
- Maintains a historical database on C&RS in support of managerial processes and has the capability to interface with the Army's standard supply system. Currently, it provides minimal interface capability, but a future version will incorporate a full SARSS interface.
- Provides TMDE information to supported units with listings of TMDE inventory, advance notification of TMDE scheduled for calibration, and TMDE past-due calibration.
- Provides a status listing of the owner's TMDE located at the TMDE support facility.

C&RS REQUIREMENTS

7-8. TMDE owners provide accurate, complete, up-to-date information on their organic TMDE to the supporting TMDE support element. To do this, TMDE owners compare the MTOE/TDA with TB 43-180 and submit additions, deletions, and changes to the TMDE support element. The TMDE support element is responsible for inputting the user-supplied data to the TIMMS database. These data are used in providing TMDE management reports.

SECTION II – THEATER TMDE TACTICAL OPERATIONS

7-9. Section II discusses the TMDE maintenance support structure and calibration and repair/support operations.

TMDE MAINTENANCE COMPANY

MISSION

7-10. The mission of a TMDE maintenance company is to provide divisional TMDE C&RS. The TMDE maintenance company accomplishes this overall mission by deploying mobile ATSTs with the division main support battalion. The ATSTs maintain inherent direct support and general support (DS/GS) capabilities regardless of the area of deployment.

7-11. The overall theater support mission encompasses C&RS of TMDE-GP, selected TMDE-SP, and secondary reference level (S-level) calibration functions provided by the area calibration laboratory (ACL) for assigned ATSTs.

7-12. The TMDE support structure is designed to provide TMDE C&RS to all levels of the Army force structure, including depots. TMDE C&RS at EAD is provided by civilian elements of USATA either directly or by contracted support.

STRUCTURE

7-13. The thrust of TMDE maintenance support is to perform C&RS, identify requirements, determine repairs, and set priorities. The TOE support structure revolves around the establishment of a TMDE maintenance company comprised of associated staff and ATSTs and augmentation teams. Figure 7-2 shows the typical structure for a TMDE maintenance company.

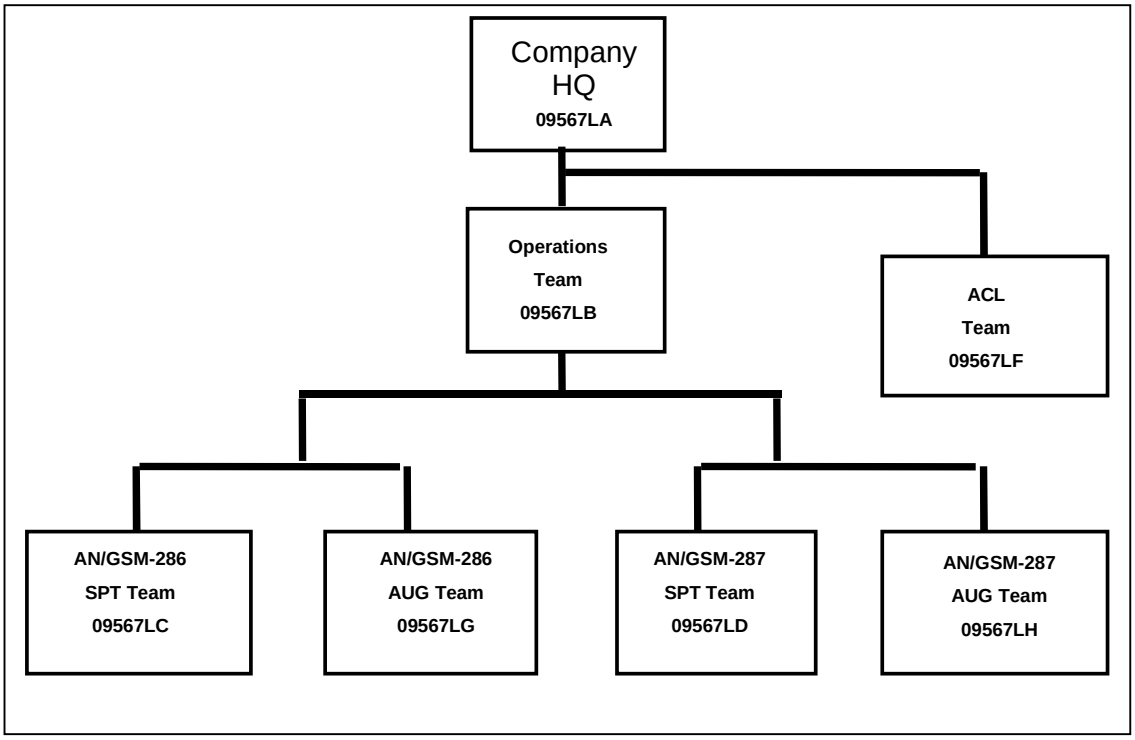

Figure 7-2. TMDE Maintenance Company

7-14. All elements of the combat service support TMDE maintenance company are considered Category II units/elements. TOE 09567LA identifies the basic headquarters team. Additional teams (09567LB through LH) are required to make up the overall company and provide the personnel and equipment to accomplish the TMDE mission.

7-15. The category and densities of supported TMDE and the geographic dispersion of supported units determine the type and number of teams that constitute a TMDE maintenance company. This approach allows for a flexible and judicious deployment of support assets, i.e., company headquarters, operations section, ATSTs, and ACL.

7-16. Assembling teams to form a full-up TMDE maintenance company will not result in a centralized location of company elements, specifically ATSTs. Most ATSTs will collocate with their units of attachment throughout the theater.

7-17. The TMDE maintenance company headquarters' elements will generally collocate at theater level with the theater support command materiel management center (TSC MMC) headquarters company and at the corps level with the corps support command (COSCOM) headquarters company. At the division level, an ATST is attached to the MSB.

7-18. Deployed TMDE maintenance company elements depend on a host unit for Class IX supply support, logistical support, and administrative

services such as food, medical, financial, legal, vehicle and generator maintenance support.

RESPONSIBILITIES

7-19. The TMDE maintenance company headquarters provides command and control for those teams located with the TMDE maintenance company headquarters. It is normally attached to the TSC/COSCOM MMC headquarters company for soldier support functions, such as—

- Logistical support.
- Food service support.
- Religious support.
- Legal services.
- Combat health support.
- Financial services.
- Personnel administrative support.

7-20. The company headquarters is responsible for the command and control of ATSTs. It performs traditional company-level administrative functions, including establishing and coordinating support agreements with supported units where ATSTs are attached. The company also operates a Class IX TMDE SSA.

7-21. The operations team, located in the corps and attached to a COSCOM MMC, plans, programs, supervises, and coordinates the technical operations of the TMDE maintenance company's C&RS mission. Functions of the operations team include—

- Ensuring secondary reference and secondary transfer standards are calibrated at prescribed time intervals, and accuracy requirements are met.
- Ensuring timely reporting and receipt of calibration and repair measurement data.
- Monitoring the accuracy of TIMMS-generated instrument master record file (IMRF) for supported units' TMDE and coordinating any changes with the LSE or USATA.
- Assisting the ACL and ATSTs with Class IX repair parts issues.
- Determining funding requirements for interservice support agreements (ISSA) for C&RS.
- Preparing operational and contingency plans.
- Maintaining a technical publications library.
- Developing on-the-job training (OJT) programs and monitoring training performance.
- Coordinating requirements for transportation of personnel and equipment.
- Providing a radiological protection officer (RPO) for the TMDE maintenance company.

7-22. Quality assurance (QA) section is responsible for monitoring the TMDE company's quality assurance and quality control programs.

Quality assurance inspections are only performed by the USATA QA office. Individual ATSTs and the ACL run quality control (QC) on the products on a random basis.

7-23. The ACL, located with the TMDE maintenance company headquarters, operates from environmentally controlled fixed structures. The ACL is not mobile. It operates and maintains the secondary reference measurement standards (S-level). It provides C&RS on standards requiring S-level calibration, particularly the secondary transfer standards belonging to the TMDE maintenance company ATSTs. To accomplish its mission, the ACL—

- Maintains the accuracy of measurement standards with traceability through the USAPSL to the National Institute of Standards and Technology (NIST).
- Performs S-level C&RS for itself, the ATST, and their supported units' TMDE, as identified in TB 43-180.
- Performs administrative functions concerning production status, management reports, and scheduling of C&RS. The ACL utilizes TIMMS in performing these and other functions.
- Evacuates to the USAPL or to the equipment manufacturer when item is beyond ACL capability.

2-24. Area TMDE support teams (ATSTs) are mobile TMDE support elements that may operate in an “uploaded” configuration where equipment and standards operate inside expandable vans. An ATST can also function in a “downloaded” configuration if required, when appropriate fixed facilities are available. The ATST—

- May be configured as either an AN/GSM-286 or an AN/GSM-287 support team.
- May be augmented when the workload exceeds the team’s personnel capabilities. Augmentation teams provide personnel only.
- Ensures secondary transfer standards are accurately maintained and traceable to NIST.
- Performs secondary transfer-level (T-level) C&RS on TMDE-GP and limited TMDE-SP.
- Generates and analyzes TMDE management reports.
- Uses TIMMS to perform automated functions concerning management and administrative tasks.
- Requests repair parts and maintenance supplies required for C&RS operations.

2-25. AN/GSM-287 support teams provide enhanced and additional functional capabilities not found in AN/GSM-286 support teams. Primarily, the AN/GSM-287 set has a greater accuracy in low-frequency standards, added capability in microwave and infrared measurements, and additional physical and electronics standards.

2-26. The supported unit is responsible for TMDE delivery and pickup to/from the TMDE support element.

Chapter 8

Safety, Security, and the Environment

Chapter 8 discusses general safety, security in maintenance areas, and environmental management. For assistance with specific questions you might have in these areas, contact your unit, installation, or major command safety, security, or environmental officer.

SECTION I – SAFETY

8-1. Section I discusses general safety programs, safety plans, responsibilities and duties of leaders and managers, accident follow-up procedures, and risk assessment and management procedures. Injuries and accidents reduce a unit's effectiveness, impact adversely on morale and discipline, and deplete operational capabilities. Under combat conditions and during continuous operations, fatigue and the stress of battle add to the causes of accidents.

SAFETY PROGRAM

8-2. The impact of a poor safety program or low safety awareness is a reduction in the maintenance structure's ability to provide quality maintenance support. An effective safety program is essential to the success of maintenance operations.

8-3. Safety must encompass all phases of support operations. Leaders and managers must ensure personnel are trained and aware of the proper handling of material, the safe use of hand tools, and the consistent application of safety practices. Personnel must be constantly vigilant to detect potential hazards, to apply control measures, to reduce or eliminate danger, and to report accidents and safety hazards promptly.

MAINTENANCE HAZARDS

8-4. Maintenance support operations involve numerous potential safety hazards. These hazards are present in operations involving—

- High voltage and amperage.
- High-pressure air.
- Hydraulics.
- Infrared radiation.
- Radioactivity.
- Radio frequency energy.
- Lasers.
- Mechanical devices.
- Solvents and chemicals.
- Explosives and flammables.

MAINTENANCE SAFETY

8-5. Personnel in maintenance units must be familiar with the contents of all pertinent publications. DA Pamphlet 25-30 lists regulations for safety policies and procedures. Technical bulletins and manuals provide information on the safe handling, use, storage, and maintenance requirements of tools, equipment, and hazardous materials. Optimum safety depends on personnel following correct safety procedures. Shortcuts or deviations can result in accidents.

RESPONSIBILITIES AND DUTIES

8-6. Safety is a command responsibility at all echelons. Commanding officers must take an active, aggressive leadership position on safety. They must appoint a unit safety officer and organize a safety committee of technical and supervisory personnel. The commander is also responsible for determining the cause of accidents and ensuring that corrective action is taken to prevent their recurrence. When existing safety rules need revision due to changes in equipment, operating conditions, or operating areas, it is the unit commander's responsibility to initiate action accommodating the changes.

LEADER LEVEL

8-7. Leaders and managers ensure that soldiers perform their duties safely. Keeping soldiers aware, ensuring they are careful, halting unsafe operations, planning, and preparing are the proactive measures leaders take to prevent accidents.

INDIVIDUAL LEVEL

8-8. Safety regulations and guidelines are for everyone's protection and welfare. Each individual is responsible for following all instructions and using all safeguards. Cooperation among workers to develop and practice safe working habits is essential to prevent injuries to personnel and damage to material and facilities. The key to the safety program is focusing the whole effort to prevent individuals from having accidents. The prevention equation is simple:

Training + Equipment + Motivation + Leadership = SAFETY

Each element must be present in the proper amount, and the individual person normally knows if this is the case.

UNIT SAFETY PROGRAM

8-9. An effective unit safety program is necessary for mission accomplishment. A maintenance mission cannot be fully successful if death, injury, or damage to equipment or facilities occurs within it. Leaders and managers must comply with regulatory requirements for their particular operations. They ensure that the program conforms with AR 385-10 and DA Pamphlet 385-1.

UNIT SAFETY OFFICER

8-10. The unit safety officer supervises, manages, coordinates activities related to unit safety, advises the commander on safety matters, including risk assessment and risk management, and suggests improvements to the unit safety program.

SUPERVISORS' RESPONSIBILITIES

8-11. Supervisors must include safety in their plans and discussions of daily maintenance operations. Supervisors must hold regular meetings in the work area. These meetings serve—

- To review and critique performance, draw out ideas on improving the safety program, and publicize new or changed safety procedures.
- As a source of information and ideas that may have a wider use.

ACCIDENT FOLLOW-UP PROCEDURES

8-12. Under the Army Safety Program, the supervisor must record each accident in accordance with DA Pamphlet 385-40. Report accidents on DA Forms 285 or 285-AB-R. Guidance for preparing these forms is in DA Pamphlet 385-40. When an accident occurs, gather all essential information. The following facts should be obtained:

- Names of personnel injured, identification of equipment or facility damaged.
- Time and place the accident occurred.
- Severity and cost (in manpower and materiel) of the accident.
- Nature of the accident.

- How and why the accident occurred.

8-13. Leaders and managers must concentrate on the prevention of similar accidents. Corrective actions can include removing hazards, improving operations, redesigning or modifying equipment, and training personnel. Near-miss accidents should also be reported so that personnel can exercise preventive measures. Leaders and managers must monitor corrective action to ensure that it is being implemented.

EQUIPMENT OPERATOR SELECTION

8-14. The unit safety program must be closely associated with the selection of equipment operators and their training. Leaders and managers must strive for an effective equipment operator qualification program. AR 600-55 contains guidance about vehicle driver training selection, testing, and licensing.

SAFETY STANDING OPERATING PROCEDURES

8-15. The safety officer is responsible for the preparation of the unit safety SOP. Some of the elements the safety officer should include in the SOP are—

- Safety officer and safety council members responsibilities.
- Safety hazard and accident reporting procedures.
- Accident or injury investigation procedures.
- Fire fighting and first aid team responsibilities.
- Location and use of safety, first aid, and fire fighting equipment.
- Responsibilities of other key unit positions (e.g., maintenance control officer, shop foreman, platoon leaders and sergeants).

Other considerations include—

- Hazardous material (HAZMAT) and hazardous communications (HAZCOM) local written policy and programs.
- Safety award program and policy.
- Location, care, and use of personnel protective clothing and equipment (PPC&E).
- Initial and sustainment safety training for assigned personnel.
- Safety action plans outlining goals and objectives.
- Periodic safety meetings.

FIRE PREVENTION PROGRAM

8-16. Fire prevention is important to a maintenance shop. The unit fire prevention program focuses on training personnel in methods of fire prevention and how to react to a fire. See AR 420-90 for guidance on establishing a fire prevention program. Teach personnel to respond instinctively with the actions required to fight fires. The primary methods of fire prevention are—

- Keep the shop and vicinity free from oil and other organic materials (such as wood, paper, and fabrics).
- Inspect the area frequently to detect and remove hazards.

HAZARDOUS COMMUNICATIONS PROGRAM

8-17. The HAZCOM program was created in response to federal law requiring each soldier to know and understand how to safely use, store, handle, and dispose of hazardous materials (primarily chemical). Table 8-1 lists the six steps required for maintaining a satisfactory HAZCOM program.

Table 8-1. HAZCOM Program Procedures

Step	Action
1	Ensure containers are properly labeled.
2	Identify hazardous materials and associated hazards to assigned personnel. By federal law, hazardous materials (chemicals) must be shipped with a materiel safety data sheet (MSDS).
3	Train personnel in the safe handling, use, storage, and disposal of each hazardous material.
4	Maintain a HAZMAT inventory.
5	Maintain a copy of the MSDS for each hazardous material on hand. Personnel should know MSDS's location and use.
6	Maintain a local written HAZCOM program, usually as an appendix to the safety SOP. The program explains how HAZCOM steps are accomplished and addresses any special procedures or requirements.

PERSONNEL SAFETY/PROTECTION PROGRAMS

8-18. Numerous safety programs can be incorporated into day-to-day maintenance operations:

- Visual protection programs.
- Hearing protection programs.
- Respiratory protection programs.
- Laser/radiation protection programs.

VISION PROTECTION

8-19. There are three types of vision hazards:

- Physical impact.
- Chemical contact.
- Energy intensity.

Vision hazards can be eliminated by using the personnel protective clothing and equipment appropriate to the maintenance operation. TB MED 506 provides guidance on establishing a vision protection program.

HEARING CONSERVATION

8-20. Noise is a hazard affecting the physical and mental abilities of personnel that must be considered in maintenance operations. See ARs 40-5 and 385-10 for guidance on hearing conservation.

RESPIRATORY PROTECTION

8-21. Maintenance operations involving the use of chemicals or paints present a health hazard. Protection from these hazards should be a safety consideration in maintenance operations. See TB MED 502 for guidance.

LASER RADIATION PROTECTION

8-22. Laser radiation can be an extreme health hazard. Certain types of equipment used in maintenance operations emit a laser beam or radiation. These hazards are a safety consideration in maintenance operations. See TB MED 524 for guidance on establishing a laser/radiation protection program.

SAFETY PLANS

8-23. Below are some safety-related plans. They can either be separate from the safety SOP or appear as an annex.

FIRE PLAN

8-24. General guidance for fire plans is contained in TMs 5-315 and 9-1300-206. Each installation or activity storing or handling ammunition must have an effective fire plan designed to prevent and fight fires. The plan must—

- Include a description of emergency functions for each section, activity, or outside agency.
- Conform to the individual installation or activity.
- Specify personnel responsibilities.

8-25. The following will be incorporated into the fire plan:

- Procedures for fire reporting.
- Procedures for orderly evacuation of nonessential personnel.
- Procedures for warning personnel of the impending danger.
- Methods for extinguishing or controlling fires until fire fighting forces arrive.

A detailed map indicating types of ammunition stored, their location, and specific hazards associated with them will be prepared. Provide this document to the local MPs and fire department.

EMERGENCY EVACUATION PLAN

8-26. The emergency evacuation plan will—

- Provide policies and procedures for emergency evacuation during fires, natural disasters, or hazardous material spills.
- Be detailed enough for personnel to know what actions to take.
- Include warnings and cautions concerning special unit operations.

GENERAL SAFETY HAZARDS

8-27. General safety hazards include—

- Noise.
- Vehicles.
- Lifting devices.

- High pressure.
- Electricity.
- Radio frequency.
- Electro-explosive devices.
- Radioactive material.
- Armed weapons.
- Mechanical equipment.
- Welding.

NOISE

8-28. Noise is a hazard that can affect the physical and mental abilities of personnel. Constant, high noise levels, either in frequency or volume, have a degrading effect on personnel efficiency. Ear damage can result from loud, sharp noises, including high-frequency chatter from electronic test equipment.

VEHICLES

8-29. Personnel who operate vehicles will be selected and trained according to guidance in AR 600-55, FM 21-305, and FM 21-306. Drivers will conduct a daily safety examination of their vehicle. Speed limits will be established within the shop area (they are not governed by installation or area regulations). Personnel will be informed of driving rules—both military and civilian. A motor vehicle accident prevention program will be established in accordance with AR 385-55.

LIFTING DEVICES

8-30. Safety must be observed during lifting; the capacity of lifting devices should never be exceeded. Lifting devices (hoists, lifts, stands, booms) must be load-tested and properly marked with their maximum lift capacity. For detailed guidance on lifting devices, see TB 43-0142.

HIGH PRESSURE

8-31. High-pressure equipment maintenance support operations are categorized as either *air* or *hydraulic*. Equipment technical manuals contain general and specific safety rules that must be followed when working with and around such equipment. Personnel should be trained in the hazards and precautions to observe while using high-pressure equipment, as well as in how to use and maintain PPC&E.

ELECTRICITY

8-32. Electrical and electronic components are present in most equipment. When dealing with these items, personnel must be thoroughly familiar with the danger of electrical shock and with lifesaving techniques. Precautions and first aid techniques are usually listed in the front of maintenance technical manuals. Operators and maintainers should thoroughly familiarize themselves with these precautions and first aid techniques. For further guidance, see TB 385-4 and FM 21-11.

RADIO FREQUENCY

8-33. Radio frequency (including microwave and ultrasound energy) and energy policies and procedures are covered in the operator's manuals for specific equipment as well as in TB MED 523. Some equipment radiates high-intensity RF energy, which may be hazardous to personnel or to other equipment. Personnel should be familiar with the hazards and special procedures involved with such equipment. Minimum safe distances are normally referenced in the technical manuals for major equipment that emits high-intensity RF energy.

ELECTRO-EXPLOSIVE DEVICES

8-34. Some squibs and detonators can be inadvertently fired by RF energy from sources like radios or radar transmitters. EEDs are relatively safe (even in strong RF fields) when enclosed in metal containers. For more details on safety under these circumstances, refer to FM 9-6 or the system technical manual.

RADIOACTIVE MATERIAL

8-35. Minimize the probability of injury from radioactive material radiation by observing the following precautions:

- Check pertinent technical manuals for designation and location of radioactive material.
- *Never* touch damaged or broken radioactive tubes with bare hands. Use proper personal protective clothing and equipment.
- Include radiation safety in an SOP and in annual awareness training.
- Inventory all ionizing (radioactive) and nonionizing (radiating) materials and sources annually. (These materials and sources can be found throughout a maintenance unit—in the M8A1 chemical agent alarm, some missile system tubes, hand-held compasses, and lasers.)
- Check local reporting procedures with the installation radiation protection officer, who is normally assigned to the installation safety office.
- Check TB 43-0116 and TB 43-0197 to determine where radioactive materials are located in military equipment.
- Check AR 385-11 for guidance on ionizing radiation protection, transportation, and disposal. Coordinate with the radiation protection officer (RPO).
- Under AR 385-11, report radiological incidents and accidents to the RPO.
- Post warning signs.

ARMED WEAPONS

8-36. Recovery teams need to know how to disarm weapon systems. Maintenance support teams should know what actions or precautions are necessary if a hangfire or dud ordnance occurs. Applicable weapon systems technical manuals should provide guidance; however, when in doubt, request help from the using unit or EOD unit.

MECHANICAL EQUIPMENT

8-37. Radar, launchers, transporters, and other associated mechanical equipment present many hazards that can result in falls or entanglement with their moving parts. Specific precautions are normally listed in the front of maintenance technical manuals. Observance of the following general precautions will reduce the chances of an accident due to mechanical contact:

- Do *not* wear loose clothing or jewelry while working in the vicinity of equipment with moving components.
- Do *not* attempt to lift equipment that normally requires movement by more than one person.
- Place warning devices or signs around areas with mechanical hazards IAW guidance in AR 385-30.

WELDING

8-38. Welders must—

- Be familiar with processes and procedures covered in TC 9-237 and in technical manuals applicable to the equipment they are working with.
- Use prescribed personnel protective clothing and equipment and consider the safety of other personnel.
- Do not operate welding equipment in areas where sparks might result in fires or explosion or where personnel may suffer eye burns from the arc.

MAINTENANCE ACCIDENT PREVENTION

8-39. Maintenance accidents involving on-duty soldiers and civilians injured while installing, removing, or modifying equipment should be addressed when developing prevention programs. Accident prevention is vital to combat readiness. The following four factors are responsible for most accidents:

- Failure to follow procedures.
- Poor supervision.
- Lack of written procedures.
- Insufficient or no training.

MAINTENANCE FACILITY ACCIDENTS

8-40. Areas that account for accidents in maintenance facilities include—

- Operation of tools and equipment.
- Lifting (see DA Pamphlet 385-5).
- Hazardous actions.
- Lack of security and inadequate inspection of equipment.
- Lack of communication.
- Poor housekeeping.
- Carelessness.
- Failure to depressurize or disconnect components or equipment.
- Fatigue.

VEHICLE ACCIDENTS

8-41. Common causes of vehicle accidents in maintenance units include—

- Lack of driver training.
- Speeding.
- Fatigue.
- Following too closely.
- Improper ground guiding.
- Failure to wear seat belts.

MATERIAL SAFETY DATA SHEETS

8-42. Material safety data sheets are the key to the HAZCOM program. Each manufacturer of hazardous materials is required by federal law to produce an MSDS for that material. The unit can obtain MSDSs by—

- Removing them from bulk packages of hazardous materials.
- Requesting them from the manufacturer.
- Requesting them through normal safety channels.

SECTIONS FOR ALL PERSONNEL

8-43. All personnel working with HAZMAT should know the following information, normally found in the first sections of the MSDS:

- Administrative information: for example, the HAZMAT's chemical name.
- General information: for example, the manufacturer's name, address, and emergency phone numbers; unit of issue; container quantity, container type; and net unit weight.
- Ingredients information: the chemicals that make up the material, its characteristics (appearance, odor, and boiling point) needed to identify a spill or leak. The boiling point is important when determining where to store hazardous materials.
- Fire and explosion hazard data: extinguishing materials, special fire fighting procedures, and unusual fire and explosive hazards.
- Reactivity: information on stability, conditions and materials to avoid, and hazardous decomposition products.

SECTIONS FOR SUPERVISORS

8-44. The remaining sections are used primarily by first-line supervisors to help them comply with their HAZCOM program responsibilities:

- Health hazards: signs and symptoms of exposure, medical conditions aggravated by exposure, and emergency and first aid procedures—items that first-line supervisors must inform personnel of.
- Precautions for safe handling and use: what to do if a material is released or spilled, what the waste disposal method is, proper handling and storage precautions, and any special precautions (most hazardous materials cannot be "simply" thrown away). Supervisors should use the information in this section to train their personnel. Military waste disposal should be handled through normal logistics channels. The unit supply or the installation logistics office will advise on procedures for

waste disposal. The installation safety office can also help identify the appropriate authority. See AR 200-1 for guidance on environmental protection and enhancements.

- Control measures: type of personnel protective clothing and equipment required to safely use a hazardous material. Supervisors train personnel how to obtain, use, and maintain the equipment. The unit safety officer should be able to answer any question concerning approved safety PPC&E.
- Transportation data: physical and chemical characteristics, fire and explosion hazard data, and reactivity as needed to safely transport hazardous materials. Refer to this section when determining the category or hazard classification of the material being transported.

PERSONNEL PROTECTIVE CLOTHING AND EQUIPMENT

8-45. PPC&E should be used as appropriate to enhance safe operations. Safety equipment must be in good working condition and capable of serving the purpose for which it was designed. Persons who are issued PPC&E should understand how to put on, wear, and maintain it. Appropriate personal protective clothing and equipment should be selected based on the operation's hazards.

8-46. The most logical method of determining the need for PPC&E and the specific kind needed is a survey of all shop operations. AR 385-10 requires written documentation on the selection of personal protective clothing and equipment. Good maintenance of safety PPC&E prolongs its life as well as the user's in addition to ensuring proper functioning and use. For further information on the use and availability of protective clothing and equipment, see DA Pamphlet 385-3 and AR 385-10.

RISK ASSESSMENT AND RISK MANAGEMENT

8-47. Tough, realistic training conducted to standard is the cornerstone of Army warfighting skills. An intense training environment stresses both soldiers and equipment, which creates a high potential for accidents. Commanders must find ways to protect their soldiers and equipment from accidents during training. Risk assessment—

- Is a commonsense way of identifying hazards and the systemic effects they have on the mission.
- Is a tool leaders can use to make smart decisions. It allows them to execute more realistic training scenarios, not otherwise possible, through the use of control measures.
- When applied to day-to-day operations, helps reduce accidents by means of proactive prevention and increased awareness.

8-48. Commanders and staff can use the following information as a guide for managing risks as it applies to their organization and mission during peace and war. Conducting risk assessment and then applying risk management should become a fully integrated part of mission planning and execution. These management tools are a way to get the job done by identifying the

areas that present the highest risk and taking action to eliminate, reduce, or control the risk.

8-49. Risk assessment and management are ways of thinking through a mission to balance mission demands against risks. Leaders must learn to assess risks during actual training events and then apply the same techniques during combat actions. Risk management techniques and procedures are included in FM 100-14.

COMMANDER RESPONSIBILITIES

8-50. As in all other areas, commanders have overall responsibility for the effective management of risk. To meet this responsibility, commanders must—

- Strive for optimum performance from their personnel.
- Select from risk reduction options provided by the staff.
- Accept or reject residual risk, based on the benefit to be derived, from an informed position (informed in the sense of knowing what they are accepting or rejecting).
- Train and motivate leaders at all levels to use risk assessment and risk management concepts effectively.
- Ensure the concepts of risk assessment and risk management are understood and applied down to the lowest rank and grade.

SUPERVISOR RESPONSIBILITIES

8-51. Supervisors and managerial personnel assist the commander in assessing risks, developing risk reduction options, and integrating risk controls into plans and orders. Additional responsibilities include—

- Developing a total commitment to mission accomplishment and the welfare of subordinates.
- Consistently applying effective risk assessment and risk management concepts and methods to operations they lead.
- Reporting risk issues beyond their control or authority to the chain of command for resolution.

SECTION II – SECURITY

8-52. Section II discusses physical security, security during tactical operations, information security, the continuous security program, and signal security (SIGSEC). Maintenance security areas discussed in this chapter are physically defined areas where access is subject to restrictions and controls. To remain as low key as possible, security areas will not normally be posted. Responsibility for the security of a unit rests with the commander. At all levels, commanders must use every means at their disposal to safeguard classified material.

PHYSICAL SECURITY

8-53. Physical security protects operational information and activities using security forces, barriers, dispersal, concealment, and camouflage. It denies the enemy access to facilities, areas, equipment, materials, and personnel.

FIXED FACILITIES

8-54. Normally, missile and electronics systems maintenance support shops will have a perimeter fence around the work area and any area where classified, sensitive, or high-cost items are repaired or stored. Other structural barriers, such as walls, bars, and roadblocks, should be constructed to provide protection equal to a chain link fence. For standards concerning the types and design of perimeter barriers, see FM 19-30.

8-55. To operate efficiently and safely, the number of perimeter entrances on the installation must be limited. When entrances are not guarded, they must be securely locked. A key control system must be in place for perimeter entrances, facility doors, and locked maintenance shops. See AR 190-11 for guidance.

OPERATIONAL SUPPORT LOCATIONS

8-56. Consider the following factors when planning, designing, or maintaining physical security in operational support locations (see AR 380-5 for detailed standards and requirements for physically safeguarding classified materials):

- The area used must meet present requirements and anticipated needs.
- Classified material in open view must be covered.
- Perimeter entrances should be accessible, within view of the maintenance control section.
- Perimeter entrances and other sensitive locations must be well lighted.
- Control signs should limit personnel to only those necessary, to control authorized entry and prevent unauthorized or accidental entry. Signs must comply with AR 420-70.
- An unattended barrier entrance must have an effective system for alerting shop personnel to persons desiring entry.

- Enough storage containers for classified or sensitive material should be available.
- A classified document log must be maintained.
- Frequent, unannounced security inspections should be conducted.
- A detailed unit SOP on security should be developed.

SECURITY DURING TACTICAL OPERATIONS

8-57. The commander uses principles discussed in the references cited in this chapter to conduct maintenance support and at the same time provide for unit security. During tactical operations, action will be taken to prevent the enemy from obtaining information relating to missile and electronics maintenance support operations. Throughout the planning, preparation, and execution phases of maintenance operations, every effort must be made to maintain security. Some practical physical security techniques during tactical operations are—

- Use security elements to the front, rear, and, when required, on flanks of convoys.
- Use listening and observation posts in bivouac areas.
- Identify likely avenues of approach and cover them with fields of fire.
- Employ obstacles to impede the enemy.
- Use challenge and passwords.
- Use early warning devices.

360° PERIMETER

8-58. Organizing units into a defensive 360° perimeter is no longer viable for the modern battlefield. This method is manpower-intensive and, at best, provides no more than a thin line of protection. Once penetrated, it is very difficult to maintain cohesion and nearly impossible to re-form into a coherent defense.

POINT DEFENSE

8-59. Positioning unit equipment and sections is the single most important factor in a unit's ability to provide adequate security while conducting maintenance for supported units. The point defense, with the fullest possible use of unit dispersion, has evolved as the most practical defense method. The concept is to disperse the unit and to emplace it by functional area. Only small areas are actively defended.

8-60. A heavily armed reactionary force is used to defeat an enemy attack. Because of their limited firepower, support units fight only when attacked. A support unit deployed in this manner has an advantage; the requirement to man a large perimeter no longer exists.

REACTIONARY FORCE TACTICS

8-61. Reactionary force operations are the key to a successful point defense. Reactionary force tactics in a point defense are easier to execute than in a perimeter defense. Although dispersion causes problems with command and control, it pays dividends in mission accomplishment and survival. Because

there is no perimeter, enemy forces will penetrate the unit area without meeting resistance. They will be forced to attack smaller, more densely armed strong points instead of penetrating a lightly held perimeter. If used properly, minefields (claymores) will greatly help channel the enemy into strong points, presenting the reactionary force with the opportunity to defeat or destroy it.

8-62. The reactionary force must be well trained, confident, and aggressive. It must have a well defined chain of command and be organized to accomplish its mission. All sections of the unit must know what the reactionary force is going to do before it is deployed.

OBSERVATION POSTS

8-63. Commanders must place observation posts (OPs) and listening posts (LPs) on likely avenues of approach. By coordinating with adjacent units, commanders can implement an integrated warning plan that will lessen the impact on any one unit. Unattended ground sensors will further enhance OP and LP effectiveness. In areas where the populace is friendly, local law enforcement and government agencies can be valuable sources of information. Intelligence information can be evaluated for unit security.

INFORMATION SECURITY

8-64. Information security is defined as the control of written, verbal, and graphic information to prevent disclosure of operations. Information security is mandatory in a maintenance support shop. The originators of information that requires protection in the interests of national defense are responsible for its proper classification.

TYPES OF CLASSIFIED MATERIAL

8-65. Materiel condition status and other indicators of system status are often classified; they must be handled in accordance with security regulations and established policy. Maps and other indicators of the physical location of units, assets, and quantities of material are sometimes classified. Information that reveals performance characteristics, test data, vulnerability, countermeasures, and signature characteristics of missile systems is classified. See AR 380-5 for guidance on information security classification.

8-66. Missile and electronics systems and TMDE material (end-items or components of end-items) are sometimes classified. This makes it necessary to give special consideration to them during transportation, storage, and handling. Procedures must be developed and enforced for the control of classified materials and publications used daily by maintenance and supply personnel. See TB 9-380-101-series for classification guidance on missile materials.

CLASSIFICATION GUIDELINES

8-67. Three types of sources contain the bases for determining the appropriate classification of a document or item:

- AR 380-5 provides information security guidance.

- Classification guides prepared by heads of DA agencies and commanding generals of major Army commands (MACOMs).
- TB 9-380-101-series and other technical publications that establish criteria or precedents for the classification of supplies, equipment, and printed matter.

CONTINUOUS SECURITY PROGRAM

8-68. Each support unit should have frequently scheduled briefings to contact each person in the unit. Such presentations are most effective when they are brief and relatively informal. Security presentations should—

- Link with situations that personnel are exposed to.
- Conform to the academic background and education of the audience.
- Be delivered convincingly by a knowledgeable person.

8-69. Assigned personnel transferring out of the unit or those who will be absent for longer than 30 days will be debriefed. Procedures should be in accordance with local policy and security regulations.

SIGNAL SECURITY

8-70. The purpose of SIGSEC is to aid mission accomplishment and to withhold intelligence information from the enemy. Commanders and their staffs must consider and apply SIGSEC in their planning and operations. SIGSEC procedures must be flexible and realistic. This involves signal operations security techniques to prevent the disclosure of operational information.

8-71. Some practical techniques for maintenance units are—

- Frequency classification. Operational radio frequency assignments should be classified confidential as a minimum.
- Net discipline. Correct communication procedures should be used, such as call signs, short radio transmissions, and signal silence.
- Authentication. Authentication protects a communications network against fraudulent transmissions. The signal operation instructions (SOI) should specify the authentication system and when to authenticate a transmission. See AR 380-40 for guidance.
- Call signs. Operators must not use personnel call signs, names, and other personnel identifiers when transmitting.
- Official messages. Military communications must be limited to official messages.
- Service messages. Service and procedural messages should be prepared and transmitted according to procedures contained in FM 24-17.
- Emergency instructions. Operators and supervisors must know and have on hand emergency operating instructions. Compromised SIGSEC procedures must be superseded as soon as possible.

SECTION III – ENVIRONMENTAL MANAGEMENT

8-72. Proper environmental management and coordination at the installation are necessary to comply with federal, state, local, and host nation regulations. This section covers the laws, regulations, policies, and programs the Army follows to comply with these regulations. Environmental management is the Army's means of conserving, protecting, and restoring natural and cultural resources while accomplishing the military mission. Proper environmental management benefits the overall mission by improving public relations and preventing delays and operational shutdowns. It also provides everyone with a cleaner, healthier, safer environment to live in.

DEPARTMENT OF DEFENSE POLICY

8-73. The Department of Defense goal is to lead the nation in protecting the environment and conserving natural resources for present and future generations. The Army has established an environmental strategy to support DOD's goal. This strategy is an integral part of the Army's vision into the twenty-first century.

8-74. The Army's environmental strategy can be illustrated in the model of a building with a foundation and pillars supporting the overall vision of environmental stewardship. The model is on a bedrock of shared national values that support the foundation. Across the foundation is the Army's tradition of leadership, which integrates the foundation blocks and provides a sound footing for the four pillars:

- Compliance: to attain and sustain compliance at Army installations.
- Restoration: to clean up contamination as quickly as possible.
- Prevention: to prevent or reduce pollution at its source to lessen future problems.
- Conservation: to conserve and preserve the natural and cultural resources under the Army's control for future generations.

ARMY POLICY

8-75. The Army policy is an integral part of the mission; it has been endorsed by the Army Chief of Staff and the Secretary of the Army. Protection of precious environmental resources is the duty of every member of the Army. Charged with the stewardship of over 20 million acres of land, the Army must never lose sight of its responsibility to preserve and protect resources.

PRINCIPLES

8-76. The guiding principle of the policy is that work and actions must be environmentally sustainable, meeting current needs without compromising the integrity of the environment for future generations. As a basis to its environmental management policy, the Army will—

- Integrate environmental consideration into all activities.
- Allocate resources and training to protect the environment.

- Ensure that installation operations are environmentally acceptable and enhance the life of military and civilian members.
- Minimize generation of waste.
- Clean up sites of past contamination.

IMPACT

8-77. Environmental issues are a major concern of the Army. With emerging laws and regulations, these issues will continue to have a growing impact on Army operations. Violations of federal, state, or local environmental laws can result in both civil and criminal penalties.

KEY LAWS AND REGULATIONS

8-78. The four primary sources of environmental law that influence Army actions are federal, state, local, and host nation. The Army will comply with laws and regulations as they pertain to individual localities and installations. Since state and local environmental laws differ, personnel need to understand that what is environmentally permissible on one installation may not be permissible on another. Therefore, check with appropriate installation personnel to determine how state and local laws apply.

FEDERAL

8-79. Federal laws provide states and federal agencies with a legal framework in which to operate. These laws include acts and executive orders. For example, the Federal Facilities Compliance Act (FFCA) allows federal, state, and local regulatory agencies to impose civil fines on federal agencies for violations of the Resource Conservation and Recovery Act (RCRA). In many federal environmental laws Congress has authorized the Environmental Protection Agency (EPA) to delegate primary enforcement responsibility to the states. Such delegated programs must be at least as stringent as the applicable federal laws and regulations; however, states may impose stricter standards in their laws or regulations. Individuals should receive site-specific training regarding their potential liability under applicable federal and state laws and regulations.

STATE

8-80. Each state has its own regulatory organization charged with developing and implementing environmental regulations. Many state regulations parallel federal environmental regulations. Some are more stringent.

LOCAL

8-81. Local laws and ordinances address the concerns of the local communities. They are based on federal and state laws; however, each municipality or community may place more stringent restrictions on certain activities (for example, noise restrictions during certain hours of the day).

HOST NATION

8-82. The Army is committed to pursuing an active role in addressing environmental quality issues with neighboring communities and assuring that consideration of the environment is an integral part of all decisions. When an installation or unit is located OCONUS in an area where an HN has minimal or no environmental laws and is not subject to federal environmental regulations decreed by the Environmental Protection Agency (EPA), the unit or installation will comply with ARs 200-1 and 200-2. In countries where there are HN laws, the final governing standard (FGS) will be used according to the executive agent of that country.

ENVIRONMENTAL COMPLIANCE ACHIEVEMENT PROGRAM

8-83. ECAP is an umbrella program that integrates five basic areas needed to achieve and maintain environmental compliance:

- Training.
- Planning and programming.
- Resourcing.
- Assessing.
- Correcting deficiencies.

This program was implemented to assist Army personnel in achieving and maintaining compliance with applicable federal, state, local, and host nation environmental regulations and to foster a sense of stewardship.

8-84. ECAP is applicable to worldwide Army installations. It covers Army environmental programs that focus on ongoing and future operations (as compared to the Defense Environmental Restoration Program, which focuses on past Army operations). OCONUS commanders determine the scope for ECAP within their commands. They often implement procedures to ensure compliance with applicable host nation, Status of Forces Agreement (SOFA), and FGS requirements, as well as the requirements of ARs 200-1 and 200-2.

COMPLIANCE

8-85. The Army is committed to setting the standard for DOD and other federal agencies as the leader in compliance with environmental laws, prevention of environmental damage, and the protection and stewardship of natural resources. The Army is making a concerted effort to integrate environmental considerations into all Army activities. It is the responsibility of all military and civilian Army personnel to ensure that the DOD and national standards for environmental challenges in the future are met.

8-86. The Army uses compliance assessment as a vehicle for attaining Army environmental program goals and improving program visibility. If the unit deals with hazardous waste (HW) and HAZMAT, internal inspections are required. HW coordinators for larger units can request a copy of the ECAP protocol to assist in developing inspections and record-keeping plans. However, the installation HW management plan should contain information to develop an inspection plan for HW generation points and accumulation sites at the unit level. TC 5-400 provides a self-assessment checklist.

POINTS OF CONTACT

8-87. Contact the environmental office for an ECAP protocol to conduct an internal or self-compliance assessment. The Army Environmental Hotline (CONUS, 1-800-USA-3845; OCONUS, 1-410-671-1699; DSN 584-1699) provides information on environmental—

- Policy and guidance.
- Points of contact.
- References.
- Stewardship.
- Federal and state laws and regulations.

UNIT-LEVEL ENVIRONMENTAL PROGRAMS

8-88. Leadership direction and support are needed to implement improvements in all areas of Army activities and operations to achieve environmental stewardship. Army leaders will ensure their effective implementation.

LEADER RESPONSIBILITIES

8-89. Unit leaders must ensure that their unit has an active and strong environmental program. They must understand the laws and know what actions to take. Leaders bring focus, direction, and commitment to environmental protection. They demonstrate commitment by—

- Resourcing the effort.
- Organizing for success.
- Training unit personnel.
- Ensuring compliance with all requirements.
- Role-modeling the unit's environmental ethic.

8-90. Environmental awareness must be part of command policy; it is enforced through the chain of command. Successes in the unit-level environmental program, the installation environmental program, and the installation environmental office increase communication at all levels. Unit leaders follows the steps in Table 8-2.

Table 8-2. Unit Environmental Program

Step	Action
1	Begin with the basics to ensure unit personnel have had environmental awareness training.
2	Designate an environmental compliance officer/HW coordinator who is properly trained and qualified.
3	Direct the environmental compliance officer to interface with appropriate environmental personnel and ensure that the unit is in compliance with environmental laws and regulations.
4	Meet with key battalion operations and training officer (S3), supply officer (S4), and installation personnel who deal with environmental issues.

Step	Action
5	Determine the requirements concerning ECAP inspections that may effect the unit and identify unit environmental problem areas and ways to avoid them.
6	Ensure the unit has a well written SOP that addresses environmental issues and procedures that apply to the unit and coordinate environmental requirements with appropriate installation and chain-of-command personnel.

NOTE

At most installations, environmental support personnel are available to help unit leaders understand the various laws and regulations. These personnel include the chain of command and key installation personnel (Directorate of Public Works [DPW] environmental officer, Staff Judge Advocate [SJA] attorneys, and range officers).

TYPES OF UNIT ENVIRONMENTAL PROGRAMS

8-91. The environmental programs that the unit should support (installation) and establish (unit) are—

- Hazardous materials program.
- Hazardous waste program.
- Hazardous communications program.
- Pollution prevention and hazardous waste minimization recycling program.
- Spill prevention and response plan program.

HAZARDOUS MATERIALS PROGRAM

8-92. The hazardous materials program's objective is to minimize health hazards and environmental damage due to use/misuse of hazardous material. Because of its quantity, concentration, or physical, chemical, or infectious characteristics, a hazardous material may—

- Cause, or significantly contribute to, an increase in mortality or in serious, irreversible, or incapacitating but reversible illness.
- Pose a substantial present or potential hazard to human health or the environment when improperly treated, stored, transported, disposed of, or otherwise managed.

MANAGEMENT RESPONSIBILITIES

8-93. To ensure the best management practices for all hazardous materials, managers—

- Maintain liaison with key chain of command and installation personnel.

- Appoint an environmental compliance officer.
- Comply with all applicable hazardous waste regulations.
- Order and use only the hazardous materials required (*never* stockpile HAZMAT).
- Use nonhazardous substitutes to the maximum extent practicable.
- Conserve resources through recovery, recycling, and reuse.
- Coordinate requirements with appropriate training.
- Comply with chain-of-command and installation HAZMAT requirements.
- Establish procedures—
  - To identify and correct management deficiencies.
  - For hazardous waste/materials fires or explosions.
  - For hazardous waste/materials spills or leaks.
  - For emergency first aid.

HAZARDOUS WASTE ACCUMULATION

8-94. One of the hazardous waste program's goals is monitoring the presence of hazardous waste that is a cause of concern to installation personnel or nearby residential populations. Hazardous substances are an unavoidable fact of Army activities, which ultimately result in some waste generation. Proper handling and disposal of these wastes will minimize danger and ensure the safety of people and the environment. References applicable to hazardous waste programs include—

- AR 200-1.
- AR 420-49.
- TM 38-410.

Handling and Disposal

8-95. If the unit deals with hazardous waste, it should—

- Comply with HW regulations.
- Ensure that wastes do not accumulate beyond quantity and time limits.
- Maintain proper HW records and submit required report.
- Employ waste-minimization techniques.

Transportation

8-96. Leaders should ensure compliance with on-post HW transportation requirements. They can contact the installation defense reutilization and marketing office (DRMO) or directorate of logistics (DOL) for details. They also ensure compliance with off-post HW transportation requirements. Public road use increases transportation requirements. The installation DOL facilities management officer (FMO) grants movement approval. Drivers transporting HW must be qualified. An HW training program should be established to ensure personnel are trained properly. Most installations use a hazardous waste train-the-trainer program.

HAZARDOUS COMMUNICATIONS PROGRAM

8-97. The HAZCOM program helps leaders determine which hazardous chemicals are present in the unit. It protects soldiers by ensuring they are aware of chemical hazards, and it ensures proper storage and use of chemicals. References applicable to HAZCOM programs include—

- AR 40-5.
- AR 385-10.
- AR 700-141.

8-98. The installation safety officer is the POC for most HAZCOM matters, including the MSDS program and the HAZCOM training program. The safety officer—

- Maintains an up-to-date list of HAZMAT/HW in the area.
- Ensures that hazardous substances are properly stored.
- Ensures that containers of hazardous substances are properly labeled.
- Maintains an MSDS for every HAZMAT in the unit.
- Ensures that personnel are properly trained and that they use proper procedures when working with hazardous substances.

HAZARDOUS WASTE MINIMIZATION PROGRAM

8-99. The pollution prevention and hazardous waste minimization (HAZMIN) program complements the HAZMAT, HW, and HAZCOM programs. HAZMIN is reduction in the amount and toxicity of HW. Pollution prevention is reduction in the amount of waste, whether it is hazardous or not (for example, recycling or reusing to reduce the amount of trash that goes into landfills). Applicable references for HAZMIN programs include AR 200-1.

INVENTORY CONTROL

8-100. Leaders ensure their units employ inventory control of hazardous materials. Hazardous materials should *not* be stockpiled in the unit. If a hazardous material has an expired shelf life, it can cost much more to dispose of the item than it did to obtain it. Any hazardous material with an expired shelf life must be handled like hazardous waste.

REDUCING HAZARDOUS WASTE

8-101. Nonhazardous product substitution is an easy way to reduce hazardous waste generation. Unit personnel should review the HAZMAT inventory in their areas to check if nonhazardous or less hazardous substitutes are available. Changes in the work process can reduce the amount of HW generated; for example—

- Using a soap-and-hot-water parts cleaner instead of a vapor degreaser.
- Changing painting operations to reduce overspray and pollution. However, any sprayed water still needs to be treated as HW, since paint particles can become waste material.

RECYCLING PROGRAM

8-102. A recycling program promotes increased use of product separation, substituting materials and changing procedures to avoid using hazardous substances (source reduction) and recycling to reduce the volume of solid waste. Most installations have a recycling program. Personnel should support it by ensuring that all recyclable materials are being recycled. These materials include (check with the installation environmental office to verify the material is recyclable)—

- Plastics.
- Oil.
- Solvents.
- Glass.
- Aluminum cans.
- Computer printouts.
- Corrugated cardboard.
- Newspaper.
- High-grade white paper.
- Brass.

SPILL PREVENTION AND RESPONSE PLAN

8-103. The Spill Prevention and Response Plan supports the Clean Water Act's requirement to prevent spills of oil and hazardous substances and to provide a prompt response to contain and clean them up. The discharge of oil or hazardous substances from installations, vehicles, aircraft, and watercraft into the environment without a permit is prohibited. Exceptions will be made in cases of extreme emergency where the discharge is considered essential to protect human life. A discharge may also be authorized by a permit or by the installation on-scene coordinator (IOSC) during a spill-incident response.

Prevention

8-104. Every reasonable precaution should be taken to prevent oil and hazardous substance spills. Unit leaders—

- Ensure that facilities are provided to store, handle, or use oils and hazardous substances and that proper safety and security measures are implemented.
- Appoint a spill coordinator and members of the unit spill response team (the designation should be in writing).
- Maintain an up-to-date spill-response plan (the plan is an installation requirement).
- Conduct periodic spill-response drills.
- Ensure that sufficient equipment and supplies (absorbent materials) for spill response are on hand, pre-positioned in the unit.
- Locate all drains, drainage ditches, streams, and ponds; plan how to prevent a spill from reaching them.

Response

8-105. Each unit needs the following:

- A copy of the Installation Spill Contingency Plan (ISCP), which is available from the environmental office.
- A current list of essential agency names and phone numbers, including—
  - Fire department.
  - Safety office.

- Provost marshal.
- Preventive medicine.
- Environmental office.

- An up-to-date inventory of all HAZMAT/HW (a copy should be provided to the post fire department).
- Spill prevention equipment (brooms, absorbent materials, hand tools, barrel plugs, personnel protection equipment).
- **A s**pill-response plan that covers—
  - General issues.
  - Oil.
  - Hazardous substances.
  - Extremely hazardous substances.

8-106. Before attempting to clean up a spill, contact the installation spill response team, safety office, preventive medicine office, and environmental office to determine the proper PPC&E. Ask when to attempt the spill cleanup and when to leave the area. With the approval of the installation spill response team, ensure that small spills are properly cleaned up and collected.

8-107. Ensure that oil, fuel, or other hazardous pollutant spills are reported to the environmental office and higher headquarters. The battalion S4 and the post environmental office can provide information on reportable spill quantities. Contaminated soil needs to be properly disposed of. Contact the installation environmental office for additional information.

TRAINING

8-108. Training is the key to accomplishing the mission. Military personnel need environmental awareness training, which leads to safer performance and establishes an environmental ethic among soldiers. Training should occur as early as possible and should be reinforced as personnel progress professionally.

8-109. In addition to general environmental awareness training, specialized training is required based on the duties and responsibilities of the individuals. Some of this specialized environmental training and much of the awareness training can be addressed most appropriately through integrated instruction or supplemental material as part of ongoing unit training programs for technical skills and leadership.

SERVICE SCHOOLS

8-110. Service schools provide environmental awareness training for soldiers as they attend professional development courses. This training provides general knowledge of human health issues, the environment, environmental ethics, and the impact of their decisions and actions on the environment. Environmental awareness training will be taught at all levels from initial-entry training to the precommand course. The US Army Engineer Center is proponent for the training.

NONRESIDENT TRAINING

8-111. The Army Correspondence Course Program (ACCP) provides a variety of environmental subcourses. Students in the ACCP Program satisfy their particular training needs themselves. Procedures for enrollment are in DA Pamphlet 351-20. Subjects include—

- Environmental Protection.
- Defense Hazardous Materials and Waste Handling.
- Hazardous Materials Handling.
- Hazardous Materials Citizen Orientation.

Environmental awareness subcourses include—

- EN 5700, Junior Enlisted Environmental Awareness Training.
- EN 5702, Small Unit Leader Environmental Awareness Training.
- EN 5704, Senior Leader Environmental Awareness Training.

UNIT TRAINING

8-112. The US Army Engineer School is proponent for the unit training program for each company-size unit. The training program assists commanders to better prepare unit personnel to face environmental issues and reduce environmental constraints that affect the mission. The program stresses before-, during-. and after-operations checks. Commanders must establish a training program to ensure that personnel are fully aware of their responsibilities.

SPECIFIC TRAINING

8-113. Many installations (including OCONUS ones) currently provide a training program for specific required training (for example, for unit environmental compliance officers and spill coordinators). Other training to support the needs of commanders is currently available. Contact each training proponent for a list of courses and training programs.

PROGRAM ASSESSMENT

8-114. A unit's environmental compliance status can be determined through formal inspection by a regulatory agency or through self-inspection using ECAP checklists as a guide. Non-Army regulatory agencies have the legal right and responsibility to inspect units and individual facilities to ensure compliance.

8-115. Once a year, EPA inspectors conduct spot inspections of installations. Local and state inspectors also conduct frequent inspections. Regulatory inspections often concentrate on a particular area like HW management. Inspection frequency guidelines have been established under the EPA Federal Facility Compliance Strategy. Inspections in other programs may occur at different frequencies. Installations and units with specific major problems can except more frequent follow-up inspections.

8-116. Often the first indication that federal, state, or other inspectors are on post is when they drop into the installation environmental coordinator's office or the provost marshal's office, asking for directions to a site on the

installation. The best policy is to be in compliance with all regulations and to be prepared for inspection at all times.

Appendix A

Sample Battalion (Unit-Level Maintenance) SOP

STANDING OPERATING PROCEDURES

[*NAME*] BATTALION

1. PURPOSE: To prescribe maintenance policies, procedures, responsibilities, and guidance for all units assigned to the [*Name*] Battalion.

2 MISSION: The mission of the [*Name*] Battalion requires that all equipment be combat-ready at all times.

3. APPLICABILITY: This SOP applies to all units and personnel assigned to the [*Name*] Battalion. This SOP is effective upon receipt and will remain in effect until superseded or rescinded. Any previous editions of [*Name*] Battalion Maintenance SOP or maintenance policy letters are hereby rescinded.

4. OBJECTIVES:

a. Maintain one hundred percent equipment serviceability with a minimum expenditure of time and repair parts.

b. Ensure maximum service life of all materiel and equipment.

c. Attain a state of training and discipline where each soldier becomes completely knowledgeable of his maintenance responsibilities.

d. Provide procedures for early detection and correction of actual or potential equipment faults at the lowest practical level of maintenance.

e. Achieve and maintain the highest materiel readiness posture necessary to accomplish assigned missions.

f. Standardize maintenance activities throughout the battalion.

g. Make maintenance training (training to prepare to go to war) a top priority.

5. DEFINITIONS:

a. Maintenance: All actions taken to retain materiel in a serviceable condition or to restore it to serviceability when it is unserviceable.

b. Command Maintenance: A period of preventive maintenance checks and services (PMCS) scheduled weekly and devoted to ensuring that all equipment functions and is operationally ready to perform its intended purpose (mission) without notice. Scheduled maintenance services and other equipment training should not be performed during command maintenance periods.

c. Operator Maintenance: The performance of before-, during-, and after-operation maintenance as prescribed in the appropriate technical manual.

d. Organizational Maintenance: The performance of preventive maintenance services, inspections, minor adjustments, replacement of designated components and assembles, and

evacuation of unserviceable equipment beyond the unit's authorized level to repair as prescribed in the appropriate maintenance allocation chart (MAC).

e. Direct-Support-Level Maintenance: The performance of mobile, responsive, and one-stop maintenance support. Performance of all authorized maintenance that exceeds a unit's maintenance capability and enhances the quick-repair and return-to-user concept. Includes inspection; troubleshooting; testing; diagnosis; repair; adjustment; calibration; alignment of components, equipment, and systems; replacement and repair of end items; light body repairs; technical assistance; establishment of an authorized stockage list (ASL), a reparable exchange (RX) operation, and a limited operational readiness float (ORF); collection, classification, and recovery services for serviceable and unserviceable materiel; and establishment and operation of battle damage assessment (BDA) teams.

6. COMMAND AND STAFF RESPONSIBILITIES:

a. Command Responsibilities: Company commanders are directly responsible for the overall maintenance condition of all materiel assigned or attached; the supervision of maintenance operation and training; and *knowing the current maintenance status of all equipment and actions being taken to repair it when it is not mission-capable*. Platoon and section leaders and supervisors are directly responsible for performance of proper operator maintenance on all items of equipment, including records, within their platoon or section.

b. Battalion Commander: *The battalion's maintenance program will be a direct reflection of how much emphasis the commander places on maintenance.* Battalion commanders are responsible for:

(1) Ensuring the battalion's overall materiel readiness.

(2) Developing and implementing instructions and procedure guidelines for company commanders' compliance with regulations governing maintenance activities.

(3) Providing for the maintenance of materiel and for supporting the efficiency of programs established for this purpose.

(4) Rendering advice and assistance in planning the battalion/company maintenance program.

(5) Exercising command supervision (inspections—formal/informal) over maintenance activities throughout the battalion.

(6) Advising higher headquarters of all aspects of maintenance in the battalion.

(7) Establishing their units' maintenance priorities.

(8) Establishing battalion maintenance goals and objectives to ensure optimal use of funds and resources for personnel, tools, facilities, repair parts, publications, time, training, and records.

(9) Conducting maintenance meetings with commanders and maintenance staff at a prescribed interval.

c. Battalion Executive Officer:

(1) Serves as battalion materiel readiness officer.

(2) Supervises preparation of the battalion and unit maintenance programs.

(3) Serves as the principal assistant and advisor to the battalion commander in maintenance matters.

(4) Reviews instructions issued by the staff to ensure conformity with established standards and policy.

(5) Supervises and reviews periodic and special maintenance reports submitted to higher headquarters.

(6) Directs staff analysis of maintenance-related issues.

(7) Evaluates the maintenance program through frequent on-the-spot inspections and evaluations of reports.

(8) Inspects all maintenance operations, including maintenance management, repair parts systems, and scheduled periodic services.

(9) Recommends changes to the maintenance program as required.

(10) Conducts weekly maintenance meetings with company commanders.

d. Battalion Maintenance Officer (BMO):

(1) Has responsibility for the overall staff supervision of all maintenance operations and programs in the battalion.

(2) Assists subordinate units solving technical problems in maintenance and supply (repair parts) and monitors unit-level maintenance operations.

(3) Assists battalion commander and executive officer in planning, organizing, and coordinating battalion maintenance activities.

(4) Advises the battalion commander and executive officer on maintenance matters and keeps them informed on the operational status of all battalion equipment.

(5) Ensures, through assistance visits and recommendations to company commanders, that unit-level maintenance procedures and programs conform with current regulations and directives.

(6) Reviews and consolidates all company maintenance reports.

(7) Briefs the Battalion Maintenance SOP to all newly assigned lieutenants and senior noncommissioned officers.

(8) Maintains the Battalion Maintenance SOP.

(9) Monitors the battalion's Army Oil Analysis Program (AOAP).

(10) Monitors the battalion's TMDE Calibration Program.

(11) Manages the Repair Parts Local Purchase Program.

(12) Coordinates maintenance matters with adjacent units.

(13) Controls and operates the Battalion Local Purchase Program for Class IX repair parts.

e. Battalion Command Sergeant Major:

(1) Attends scheduled maintenance periods.

(2) Ensures that unit first sergeants and first-line supervisors are present during scheduled maintenance periods.

(3) Advises the battalion commander on the units' maintenance personnel gains, loses, strengths, and weaknesses.

(4) Checks maintenance operations, particularly operator training, supervisor involvement, and maintenance and safety awards program.

(5) Checks motor park areas and motor pool facilities through frequent on-the-spot inspections.

(6) Identifies maintenance weaknesses, makes corrections though the NCO chain, and advises the battalion commander as needed.

(7) Ensures that preventive maintenance is performed on weapons and on NBC, communications, and dining facility equipment through frequent inspections and makes appropriate corrections through the NCO chain.

7. COMMAND MAINTENANCE PERIODS AND PMCS:

a. Every Monday (all day) is Battalion Command Maintenance Day. When Monday is a holiday, the next day will be Command Maintenance Day. Command Maintenance Days will be included in units' weekly training schedules.

b. Commanders will ensure that *specific maintenance objectives* are planned and assigned for each scheduled period of preventive maintenance. "Doing the weeklies" is not an acceptable answer or plan. Maintenance objectives should be rotated to include specific items of special interest (maintenance indicators) on the equipment and maintenance of low-density equipment, e.g., generators, communications, NBC, weapons, tentage, tools, and dining facility equipment. Leaders and supervisors must be aware of the maintenance objectives for the period and take an active role in ensuring their accomplishment. At least two items (indicators) (e.g., batteries, canvas, parking brakes, jackshaft bolts, tires) will be checked by commanders, leaders, and supervisors on different items of equipment during the command maintenance day as part of the maintenance objectives or plan.

c. Results must be checked at the end of the maintenance period by the company commander and first sergeant, assisted by maintenance personnel; appropriate feedback is given to all concerned.

d. All equipment will be checked and exercised in accordance with appropriate operator's manual, including low-density equipment (generators, pumps, heaters).

e. During maintenance periods there will be a minimum of one operator present for each major item of equipment.

f. Organizational mechanics will be present to provide assistance to operators and supervisors as required.

g. Every leader/supervisor of the unit's maintenance chain must be present.

h. Platoon/section leaders and supervisors must also have a plan for each Monday. They will ensure that operator's manuals are available and used and that organic tools and materials are provided to assist operators in performing the preventive maintenance checks and services.

i. The motor sergeant or maintenance supervisor will ensure that POL products and other required materials are available.

j. Supervisors will ensure that operators are knowledgeable in the use of DA Form 5988-E, as provided by ULLS-G, and that they understand the flow of the form within the unit's maintenance program when discrepancies are noted during PMCS.

k. Operators will use the ULLS-G DA Form 5988-E to record equipment discrepancies that cannot be corrected on the spot or those that require repair parts. The DA Form 5988-E will be

turned in through the squad/section/platoon leader to the motor sergeant or maintenance supervisor for corrective action at the end of the maintenance period. The DA Form 5988-E must be checked by operators during PMCS. Supervisors must follow up by coordinating corrective actions with the motor sergeant. Staff members will supervise the maintenance of equipment assigned to their sections. Operators, first-line leaders, maintenance supervisors, and commanders are responsible for checking, following up, and keeping information current and correct on the DA Form 5988-E.

l. Operators will perform appropriate PMCS prior to dispatching the equipment. Platoons/sections will follow the same procedures outlined in command maintenance to ensure that faults are corrected and that necessary parts are ordered.

8. DISPATCHING PROCEDURE:

a. For control and planning purposes, dispatches will be requested using a locally made and reproduced form signed by the individual whose name will appear in the "Report to" block of the automated ULLS-G DA Form 5987-E.

b. Platoons/sections must submit requests for dispatch in ample time to allow operators to perform before-operation PMCS.

c. Prior to issuing the motor equipment utilization record, the dispatcher must verify that the intended operator has in his/her possession a *valid* operator's permit authorizing the individual to operate the item of equipment.

d. Dispatcher, operator, and first-line supervisors are responsible for checking the equipment identification card (in front of Equipment Record Folder—Logbook) for any service or AOAP sampling due.

e. Any discrepancies identified during PMCS that would render the equipment not mission-capable (NMC) must be corrected prior to dispatching it. Dispatch of vehicles/equipment on limited operation must be approved by the unit commander and done in accordance with DA Pam 738-750. Operators will use the DA Form 5988-E to list new faults they cannot fix and faults corrected by replacing parts. Faults previously recorded and action taken by maintenance personnel ordering parts must be reflected on the DA Form 5988-E.

f. Vehicle safety standards as outlined in AR 385-55 must be adhered to during the dispatch process. Vehicles with defective parking brakes, *any* gasoline leak, or Class III diesel, oil, or water leak will render the equipment NMC until repaired. Further, no vehicle will be operated with conditions (standards) outlined in AR 385-55 unless authorized by the unit commander (limited operation dispatch using DA Form 5988-E). Such conditions do not automatically "deadline" the equipment.

g. Supervisors/leaders will ensure that operators perform PMCS and verify the DA Form 5988-E, which is checked by the dispatcher before issuing the required motor equipment utilization record, DA Form 5987-E. Also, supervisors on dispatch ensure that a fire extinguisher and first aid kit are in serviceable condition and in the possession of the operator.

h. Off-post dispatches will be closely monitored by unit commanders. Operators will be given a safety briefing by their supervisor prior to leaving the motor pool. There must be two soldiers in each vehicle going off post, and the "shot gun rider" should be in grade E5 or above.

i. Except for training or emergency purposes, E7s and above are not authorized to operate military vehicles in the battalion.

9. LICENSING AND TRAINING OF OPERATORS:

a. Minimum standards for selecting, training, testing, and licensing drivers of wheeled vehicles are contained in AR 600-55, FM 55-30, FM 21-305, and AR 385-55. Criteria for selecting, training , testing, and licensing mechanical/ground support equipment operators are contained in AR 600-55, TB 600-1, and TB 600-2. These publications will be on hand in each unit and will be the subject of special interest during battalion inspections.

b. Each company commander will appoint in writing individuals to perform as *qualifying officials* (examiners) in the grade of SSG or above. Examiner(s) must be qualified on, and licensed to operate, *each type of equipment* they are authorized to verify or test.

c. Commanders must ensure that a *comprehensive training program* is implemented in the company (preferably included in the training schedule), which incorporates safe, legal operation of the equipment on and off post, familiarization with all equipment assemblies and components, how to perform PMCS using the appropriate manual, and how to properly fill out DA Form 5988-E. Examiners should be used as chief trainers of their respective items of equipment.

d. The battalion maintenance officer (BMO) is responsible for monitoring the training program at battalion level in accordance with AR 600-55.

e. Qualifying officials (examiners) must ensure that individuals being tested were actually trained and are fully qualified to operate the specific item of equipment. They also ensure that individuals understand the appropriate operator's manual and are capable of performing adequate PMCS. Examiners must ensure that operators demonstrate the ability to complete DA Form 5988-E.

f. Operator's permits are issued IAW the End User Manual for Unit-Level Logistics System (ULLS) and DA Pam 750-35. Information entered on the permit must be accurate. Strikeovers, erasures, correction fluid/tape, and obscuring or otherwise making an entry illegible are not permitted.

g. Operator licenses (DA Form 5984-E) issued by ULLS-G will be laminated for protection from normal wear and tear. The licenses of operators who will receive TMP certification must not be laminated until the automated DA Form 5984-E has received a verification stamp from TMP.

h. ULLS-G 5983-1-E and DA Form 348 for each qualified operator will be maintained by the commander's appointed individual following guidelines contained in DA Pam 750-35 and End User Manual for Unit-Level Logistics System (ULLS).

10. ASSIGNMENT OF OPERATORS AND MARKING OF EQUIPMENT:

a. Commanders will ensure that each item of equipment has a *qualified* operator assigned to it and, when practical, an assistant driver/operator.

b. Each vehicle (prime mover) will have the name of the operator and his immediate supervisor stenciled on the lower right-hand corner of the windshield (passenger side) of the cab, visible from the front of the vehicle. All other vehicle markings will be in strict accordance with TB 43-0209. Windshield markings will be in blocked letters not bigger than two inches.

c. For specific polices and guidelines for CARC and camouflage pattern painting (CPP), see AR 750-1. Since there are no adequate painting facilities in the battalion, only spot painting is authorized. Painting of entire vehicle or equipment will be done only at OSHA-approved facilities. Requests for painting an entire vehicle will be submitted on DA Form 5990-E through the local DOL.

d. Military load classifications (MLCs) are listed in FM 5-170. Every self-propelled vehicle over three tons must display its MLC on the front. If the vehicle's weight doesn't change, paint a nine-inch-diameter forest green circle directly on the vehicle. Paint the MLC in three-inch-high, lusterless black numbers centered on the circle. If the load is likely to change, as when pulling a trailer or driving a truck on equipment that runs empty sometimes and loaded other times, use a kit, NSN 9905-00-565-6267, so the numbers can be changed. For a set of replacement numbers for the sign kit, use NSN 9905-00-565-6268. Every vehicle with an MLC that may change *must* have the truck's/equipment's basic MLC painted on the side. No specific location is called for, but the best place on a truck is the upper right area of the right door, where it is best protected from wear and scrapes. Paint a black number, three inches high, centered inside a circular black border 3/4 inch wide and six inches in diameter, directly on the painted camouflage. Try not to put it on any black area in the camouflage. (Extracted from *PS Magazine*, issue 413, April 1987, pages 18-20).

e. Each operator will be familiar with and know his vehicle's military load classification.

f. The numerals and letters used to identify the [*Name*] DISCOM/Group, [*Name*} Battalion, company to which the equipment belongs, and administrative number will be made using flat black paint and two-to-three-inch-high letter and number stencils. No rectangles or color background to stencil marking will be used.

g. The prescribed tire pressure will be marked on the fender above each wheel (or on the body or frame immediately above each wheel when fenders are not used), with one-inch letters and numbers. The letters *TP* will precede the applicable tire pressure, using flat black paint.

h. Maximum tank fuel level will be marked using one-inch letters and flat black paint.

i. Maximum speeds for both on- and off-road driving will be stenciled on the dashboard or other appropriate place in the cab of all vehicles using one-inch letters and numbers.

11. TRAINING OF MAINTENANCE PERSONNEL:

a. Unit commanders will establish formal and on-the-job training programs to further develop mechanics' skills in the areas of troubleshooting malfunctions and using tools and test equipment. Training must be formalized with records kept of particular training and each individual's progress.

b. Commanders will also establish cross-training programs to ensure *critical* maintenance positions can be filled during the absence or shortage of personnel occupying those positions.

12. STANDARDS FOR MAINTENANCE AT UNIT LEVEL: Commanders will include in their respective unit's SOP the standards that guide maintenance personnel and supported platoons. Motor pool working hours, work uniform (coveralls, safety shoes, etc.) for mechanics, cleanup periods, and breaks must be standardized.

13. SCHEDULED SERVICES:

a. All scheduled services will be recorded using ULLS-G and listed on the unit's training schedule. Scheduling of all services will be coordinated with the battalion S3 in order to have equipment and personnel available to perform the service. Units will publish a training schedule for maintenance services (by bumper number and type of service) at least *monthly* and distribute it to all personnel responsible for performing services, operator/crew, and organizational mechanics.

b. When possible, the day before the service is to be performed, the motor sergeant should assemble the mechanics, first-line supervisor, and operator of the equipment to be serviced and give them a briefing on what is to occur the next day. On the day of the service this team must have the appropriate manuals, including proper lubrication order (LO), on hand. The motor sergeant must make available all resources and materials needed for the service, e.g., filters, lubricants, special tools, etc.

c. Leaders and supervisors ensure *assigned* operator is present to assist the mechanics during the service.

d. Leaders and supervisors must know how a service is supposed to be performed and *check it*. This is an integral aspect of quality control.

e. While the service is being performed, maintenance personnel should take advantage of the equipment and the operator's "captive time" and conduct a hundred percent technical inspection (TI) of the item. At the same time, any parts on hand for the serviced item must be installed and the ULLS-G uncorrected fault record updated.

14. INTERNAL QUALITY CONTROL AND QUALITY ASSURANCE:

a. A sound internal quality control/assurance program in each unit is the key to an effective maintenance program. It should be directed at:

(1) Preventing defects.

(2) Detecting deficiencies.

(3) Verifying compliance with established standards.

(4) Taking actions to eliminate rework resulting from improper or inadequate maintenance practices.

b. When inspectors are not assigned, QC/QA is performed by the senior maintenance supervisor designated, technically qualified personnel, the maintenance chain of command, and the owners of the equipment being serviced or repaired.

c. Commanders will address the subject of internal quality control in the unit's maintenance SOP and will define responsibilities concerning QC/QA, especially during equipment service or repair.

15. NON-MISSION-CAPABLE EQUIPMENT POLICY:

a. Commanders and leaders/supervisors at all levels are expected to know at all times the status of assigned equipment, particularly pacing items and low-density equipment.

b. Standards include:

(1) Twenty-four hours to order unit-level repair parts once the equipment is identified as NMC.

(2) Seventy-two hours to work-order equipment to the DS-level maintenance unit upon determining that repair is a DS-level responsibility.

(3) Once repair parts are received for NMC equipment at unit level, the standard is that the parts are installed immediately, returning the equipment to a fully mission-capable (FMC) status. Operators and first-line supervisors should be an integral part of the process. They should not be allowed to leave while motor pool mechanics work at night repairing their equipment. Only then will operators and supervisors have an appreciation for the mechanic's job and become more cognizant of their own role in the discipline of preventive maintenance.

(4) Once equipment is accepted by the DS-level maintenance units, unit motor officers and maintenance supervisors must stay in constant touch with the maintenance unit's mission requirements. [*Unit Name*] personnel should be contacted when difficulties are experienced in this area. Leaders'/supervisors' knowledge of the latest status of equipment work-ordered to DS-level maintenance will be an area of special interest during maintenance meetings conducted by the battalion commander and XO.

(5) When notified by the maintenance unit that an item of equipment is ready for pickup, units will proceed immediately to pick it up. Once equipment is picked up from the maintenance unit or repaired at unit level, [*Unit Name*] personnel will be notified immediately (by phone or in person) to make corresponding changes to the unit's materiel condition status report.

16. SAFETY AND FIRE PREVENTION:

a. The entire chain of command must be safety conscious and must ensure all personnel in the unit adhere to these guidelines and practice safety at all times.

b. Commanders will designate a safety officer and NCO. Their duties must be defined in the unit's safety SOP.

c. A fire marshal will also be designated and his duties specified and defined.

d. At least one safety meeting will be conducted *monthly* by maintenance supervisors and the safety officer or NCO for all maintenance personnel. A record of dates and subjects discussed should be maintained and furnished to inspectors upon request.

e. No-smoking signs will be posted in maintenance shop areas. Smoking will be allowed only in designated areas. Smoking will not be permitted *within 50 feet* of stored flammables.

f. Paint, POL products, solvents, and gas cylinders will be stored separately and in proper designated areas. *Never use gasoline as a cleaning solution.*

g. Clean and dirty/oily rags will be segregated and stored in covered metal containers.

h. Do *not* store power-generation or other small-engine equipment with fuel in the tanks in a building.

i. Power generators and small-engine equipment, e.g., heaters and pumps, will *not* be refueled inside a building while hot from operation or while engine is running.

j. Fire points must be identified and all personnel must be trained in the use of different fire extinguishers. A workable fire plan must be developed and posted throughout the maintenance area.

k. Floors must be kept clean and reasonably free of oil, grease, sawdust, etc.

l. Proper color codes must be used for safety markings throughout the maintenance areas IAW AR 385-30.

m. Gas cylinders must be properly color-coded and equipped with the correct valves and fittings. Also, valve protection covers must be placed on all cylinders when not in use. Cylinders will be stored IAW AR 700-68.

n. The maximum speed in the motor pool area is 5 mph.

o. Ground guides will be used when a vehicle is being moved in the motor pool. Ground guides will *never* stand between the vehicle and a stationary object.

p. Equipment will *not* be left unattended with engine running.

q. Rear safety straps (one side will be welded in place) will be used when transporting personnel in equipment cargo beds. Personnel must be seated when equipment is in motion.

r. Seat belts will be used by all passengers and driver when equipment is equipped with them.

s. Internal combustion engines will *never* be operated in a closed room unless exhaust is properly vented to the outside.

t. Vehicle and equipment will be started and operated by only properly licensed individuals.

u. Chock blocks will be used when parking vehicles and equipment. This applies at all locations, including the unit area and motor pool.

v. Welding areas must be fireproof and vented. When welding is done outside, proper shielding must be provided.

w. Horseplay will not be permitted in maintenance facilities or motor pool area.

x. Hearing-protective devices will be used in areas with high noise levels. All operators and maintenance personnel must have such protective devices available at all times.

y. Personnel will not lean on, stand, or sit under equipment suspended by recovery vehicles, A-frames, jacks, or other forms of overhead lifting devices.

z. Jack stands or trestles will be used to support equipment when work underneath is required.

aa. Protective supplemental safety clothing will be used when performing welding operations or when handling batteries.

bb. Face and eye protection must be worn when performing welding, cutting, grinding, sanding, or chipping operations.

cc. All tools will be used only for their intended purpose. Do *not* use power tools with frayed electrical cords or without proper grounding.

dd. All lifting and support devices will be maintained, inspected, and/or load-tested at regular intervals as required.

ee. There must be a tire-inflating cage in each maintenance facility built in accordance with safety specifications. The inflation cage depicted in TM 9-2610-200-14 will meet all Army requirements and OSHA standards. The entire chain of command is responsible for the cage's adequate and safe use with the correct tire air hose and gauge. Use NSN 4910-00-441-8685 for the air hose and gauge.

ff. Proper use of compressed air and hydraulic equipment will be stressed.

gg. Power-generating equipment and fuel-dispensing pumps will be properly grounded prior to use.

hh. Creepers will be leaned (upright position) against the workbench when not in use.

ii. Breathing asbestos dust is hazardous to your health. Danger of inhaling asbestos particles or dust occurs when the material containing asbestos can be crumbled, pulverized, or reduced to powder in the hand, or when it readily releases fibers with only slight disturbance. Use approved respiratory protection as directed by AR 40-5 and TB Med.502.

17. HAZARDOUS WASTE DISPOSAL AND ENVIRONMENT PROTECTION:

a. Units will adhere to guidelines of the [*Your*] Battalion Hazardous Waste SOP. The S4 will coordinate all hazardous waste storage.

b. Hazardous waste and waste oil will be collected and stored in separate containers.

c. Containers will be marked with the following:

(1) “HAZARDOUS WASTE” or “WASTE/USED OIL.”

(2) Date waste was first collected in the container, e.g., "Start: 9-23-99."

(3) The NSN and nomenclature of the product being collected.

(4) "FLAMMABLE," "CORROSIVE," or "COMBUSTIBLE" as appropriate.

(5) Date when container was filled.

d. Leave at least two inches of air space in filled containers.

e. Contaminants will not be released into any water service.

f. Waste petroleum products will be stored *only* in approved containers.

g. Contaminants will not be discharged directly onto the ground.

h. Radiators will *not* be drained onto the ground or into storm drains. Waste antifreeze will be disposed of in approved containers.

i. The maintenance chain of command will actively supervise personnel to insure minimal environmental impact due to maintenance operations.

j. Any small spills on hard surfaces will be immediately cleaned using appropriate absorbents and the contaminated absorbent disposed of at the sanitary landfill authorized for hazardous wastes.

k. For spills on soil areas, the contaminated soil will be removed and disposed of at the sanitary landfill designed for hazardous wastes. Fresh top soil/gravel will then be spread over the area.

l. Under no circumstances will small spills be washed into floor drains.

m. Immediate action must be taken to contain large spills. Large spills are defined as being more than five gallons in volume or 100 square feet in area.

n. Unit commanders will be notified immediately when a large spill occurs.

o. Used or contaminated POL products will be turned in to the installation collection point by coordinating with the battalion S4.

18. ENERGY CONSERVATION:

a. Energy Conservation Officer/NCO: All units will have an energy conservation officer and NCO appointed in writing.

b. Inspections: Energy conservation officer/NCO will conduct unannounced inspections of the maintenance areas and activities at least once a month. Results of inspections will be maintained on file subject to future inspection.

c. Fuel conservation measures related to training activities:

(1) Reduce operations/training that involve vehicles and other fuel-consuming equipment without incurring unacceptable degradation of operational readiness.

(2) Use the smallest vehicle possible consistent with the mission.

(3) Reduce FTX and CPX numbers and scope consistent with readiness requirements.

(4) Establish tight controls on off-post training.

(5) Use maximum foot movement to training/administrative areas and in conduct of training/daily activities.

(6) Extend the length of required field training exercises to maximize use of equipment once in place.

d. General fuel conservation measures:

(1) Exercise good vehicle maintenance and driving practices.

(2) Properly tune engines.

(3) Correctly inflate tires.

(4) Clean and replace air filters (cleaners).

(5) Avoid rapid starts from intersections and excessive use of brakes.

(6) Consolidate trips, dispatching fewer vehicles on a daily basis.

(7) Eliminate unnecessary idling of vehicle engines.

19. ACCIDENT REPORTING:

a. The unit safety officer or commander must notify the battalion safety officer (or in his/her absence, the battalion executive officer) *immediately* following an accident. The following information must be provided (all accidents, regardless of the degree of injuries sustained, must be reported in this manner):

(1) Date of occurrence.

(2) Time and location.

(3) Name, rank, age of personnel involved.

(4) Unit.

(5) Type of injury, if any.

(6) Brief description.

b. All *classes* of Army accidents are *reportable* to the battalion safety officer. However, only *certain classes* of accidents require a DA Form 285.

c. For accidents requiring a DA Form 285, the unit commander will make sure that an investigation is conducted to get the information required by the form.

d. The completed form must be forwarded to the safety officer or the battalion executive officer within two days of the accident. See the Battalion Safety SOP for instructions on how to complete the form.

e. DA Form 285 must be completed on the following:

(1) Class A, B, and C accidents.

(2) Class D accidents dealing with occupational illnesses caused by repeated exposure over a period of time. Examples are noise-induced hearing loss, asbestosis, radiation poisoning, organic solvent exposure, dermatosis, silicosis, etc.

f. Classes of accidents:

(1) Class A accident. The total cost of property damage, injury, or occupational illness is at least $500,000; a fatality occurs as a result of Army operations; or a soldier is fatally injured off post.

(2) Class B accident. The total cost of property damage, injury, or occupational illness is at least $100,000 but less than $500,000.

(3) Class C accident. The total cost of property damage is at least $10,000 but less than $100,000; or an injury or occupational illness results in a lost workday case involving one or more days away from work.

(4) Class D accident. The total cost of property damage is less that $10,000, but an injury or occupational illness resulted in a lost workday case involving one or more days of restricted work activity; or a nonfatal case resulted in no lost workdays.

20. SECURITY OF MAINTENANCE FACILITIES AND EQUIPMENT:

a. All vehicles and equipment will have an approved chain and a 200-series lock available to secure them when not in use or when unattended in both garrison and field training exercises. Brass locks are authorized only to secure POL storage tanks and pumps to prevent sparking.

b. At close of business all responsible personnel will ensure that offices, tool rooms, shops, CONEXs, vehicles, equipment, and repair parts are properly secured. Individual toolboxes will be locked with a 200-series lock and secured to a metal rack or stored inside the toolroom.

c. Privately owned vehicles (POVs) will not be permitted inside motor pools unless they belong to civilian contractors working in the motor pool facilities. POVs may be parked in designated areas in the motor pool for the purpose of securing them during unit deployment when involved in extensive field training exercises.

21. RECOVERY OPERATIONS:

a. Units in the battalion are responsible for recovery of their organic equipment.

b. When the operator detects an inoperable condition, he assesses the damage and initiates action by informing the chain of command. (The unit's SOP should prescribe notification procedures.)

c. When recovery is beyond the unit's capability to perform, recovery support will be requested from the DS-level maintenance unit.

d. Units requesting recovery support should provide the following information:

(1) Type vehicle to be recovered.

(2) Bumper number.

(3) Exact location of vehicle.

(4) The problem or suspected problem.

(5) Location of the requestor.

22. WORK ORDER OF EQUIPMENT TO DS-LEVEL MAINTENANCE:

a. Units in the battalion must coordinate by phone or in person with either the NCOIC or maintenance control officer of DS-level maintenance units on maintenance support issues. Unit commanders are encouraged to visit at any time; particularly on assumption of command, supported unit motor officers should make a habit of visiting the DS-level maintenance units at least once a week.

b. The [*Name*] maintenance company is responsible for providing DS-level maintenance and Class IX supply support for the following categories of equipment:

(1) Tactical vehicles and trailers.

(2) Weapons.

(3) Communications and electronics.

(4) Air conditioning and refrigeration.

(5) Quartermaster and chemical equipment.

(6) COMSEC.

(7) Allied trades (welding, body and fender, radiator repair, glass, light duty fabrication, and machining).

(8) Canvas and tentage.

(9) Fuel and electric components.

(10) Batteries.

c. The standard is two working days from the time equipment becomes NMC to have it work-ordered to the DS-level maintenance unit. When deviations from this standard occur, unit commanders must give reasons in the weekly maintenance meeting.

d. With proper coordination between the unit and the DS-level maintenance unit, the initial/acceptance inspection may be conducted at the customer unit or on site.

23. MAINTENANCE OF WEAPONS AND COMMUNICATIONS, MESS, AND LOW-DENSITY EQUIPMENT:

a. Low-density equipment like generators, pumps, and trailers must be properly maintained and exercised at least once a week. Other types of equipment not normally found under the control of the organizational maintenance section will be maintained in accordance with applicable technical manuals. Weapons and communications and dining facility equipment fall under this category. Records will be kept of such action and will be subject to special interest during command inspection programs (CIPs).

b. Generators must be exercised under load at least once a month. Load banks from the DS-level maintenance unit may be utilized for this purpose.

24. VEHICLE LOAD PLANS:

a. Each unit must have complete vehicle load plans approved by the company commander. They must be adhered to when deploying to the field and when returning from exercises.

b. Copies of the vehicle load plans must be on hand while convoying and available for inspections during exercises and CIPs.

25. TOOLROOM OPERATIONS:

a. Unit commanders will ensure that a primary toolroom attendant is appointed and has signed for all hand tools, sets, kits, outfits, and TMDE secured or stored in the toolroom.

b. Inventory of tools will be performed IAW DA Pam 710-2-1.

c. Tools will be stored and issued IAW DA Pam 710-2-1. Items of special interest include a list (to be kept in the toolroom) of personnel authorized to draw tools from the toolroom. A separate sign-out log (ledger) must be kept for each set, kit, and outfit (SKO) in the toolroom. The log will be prepared for the end item only; a major SKO may contain individual sets or kits within the end item. Minimum log entries are:

(1) NSN and noun nomenclature of tool.

(2) Quantity issued.

(3) Date of issue.

(4) Name and signature of individual receiving tool.

(5) Initials of toolroom attendant when tool is returned.

d. Toolroom attendant will check tools when they are turned in for cleanliness and serviceability, will initiate immediate action to get replacement for lost or unserviceable tools, and will turn in all excess and unserviceable tools through proper channels.

26. PUBLICATIONS:

a. Unit commanders will appoint a publications officer and NCO. They will become familiar with the publications system and the contents of DA Pam 25-33, DA Pam 25-30, and [*other local command publications*].

b. All maintenance and equipment-related Army and local command regulations, circulars, SOPs, supplements, technical bulletins, technical manuals, field manuals, supply manuals, lubrication orders, and blank forms must be on hand or on requisition at all times.

c. Publications in the [*Unit Name*] will be requisitioned through the S1 (Publications NCO).

d. *PS Magazine (The Preventive Maintenance Monthly)* publishes in each edition a list of new and changed publications.

e. Maintenance supervisors must ensure that publications on hand are current, changes are posted, and no pages or sections are missing from manuals.

f. Publications must be available and accessible to mechanics, and all operators must be provided with a -10 (operator's) manual. Evidence of use is a good indication of availability and accessibility.

g. Table A-1 provides a list of recommended publications that should be on hand in each unit to facilitate implementation of the maintenance program. The list, which is not all-inclusive, is subject to change:

Table A-1. Recommended Publications

ARMY REGULATIONS	
11-1	Command Logistics Review Program (CLRP)
11-2	Internal Control System
25-400-2	Modern Army Record Keeping (MARKS)
140-15	Maintenance of Equipment
190-11	Physical Security of Weapons (Update)
190-13	The Army Physical Security Property (Update)
190-51	Security of Army Property (Update)
220-1	Unit Status Reporting
310-2	Distribution of DA Publications
310-34	DA Equipment Authorization and Usage
350-1	Army Training
350-17	NCO Development Program (NCODP)
385-10	Army Safety Program
385-30	Safety Color Code Markings and Signs
385-32	Protective Clothing and Equipment
385-41	Accident Reporting and Records
385-55	Motor Vehicle Accident Prevention
420-55	Food Service and Related Equipment
420-90	Fire Prevention
600-20	Army Command Policy and Procedures
600-55	Motor Vehicle Driver Selection, Testing and Licensing
614-20	Selection of Enlisted Soldiers for Training and Assignment
672-20	Incentive Awards
700-4	Logistics Assistance Program
700-84	Issue and Sales of Personal Clothing (update)
700-138	Army Logistics Readiness and Sustainability
700-139	Army Warranty Program Concepts and Policies
710-2	Supply Policy Below Wholesale Level (update)
725-50	Requisitioning, Receipt, and Issue System
735-5	Property Accountability (update)
740-3	Care of Supplies in Storage Program
746-1	Packaging of Army Materiel for Shipment and Storage
750-1	Maintenance Concepts and Policies (update)
750-10	Modification of Materiel and Safety of use Messages
750-20	Prevention, Control, and Abatement of Pollution from Mobile Equipment
750-22	Maintenance of Supplies and Equipment AOAP
750-25	Army Test, Measurement and Diagnostic Equipment (TMDE) calibration and Repair Support Program
750-43	Test, Measurement and Diagnostic Equipment (TMDE)

Table A-1. Recommended Publications

FIELD MANUALS	
3-4	NBC Protection
3-5	NBC Decontamination
3-100	NBC Operations
5-20	Camouflage
5-36	Route, Reconnaissance, and Classification (Vehicle Load Marking, Bridge Classes)
9-207	Cold Weather Operations-Maintenance
10-14	Unit Supply Operations (Manual Procedures)
10-14-1	Commander's Handbook for Property Accountability at Unit Level
10-16	General Repair: Tents, Canvas, Webbing
10-20	Petroleum Pipelines, Tanks and Related Equipment
10-52	Field Water Supply
10-69	Petroleum Supply Point Equipment and Operations
10-70	Inspecting and Testing Petroleum Products
10-71	Petroleum Tank Vehicle Operation
20-22	Vehicle Recovery
21-11	First Aid for Soldiers
21-26	Map Reading
21-31	Military Symbols
21-60	Visuals Signs
21-305	Manual for Wheeled Vehicle Driver
24-1	Combat Communications
24-20	Field Wire and Field Cable Techniques
25-2	Unit Training Management
29-2	Organizational Maintenance Operations
29-24	General Support Maintenance Operations
38-725	DSS (Management and Procedures)
38-725-10	Logistics Codes, Unit/Organization
38-725-23	Logistics Codes
43-2	Metal Body Repair
43-11	DS Operations
43-4	Wood and Metal Repairs
43-5	Unit Maintenance Operation
55-30	Motor Transport Units and Operations
55-506-1	Basic Electricity
100-10	Combat Service Support
101-5	Staff Organization and Operations
DA PAMPHLETS	
25-30	Consolidated Index of Army Publications (microfiche)
310-10	The Standard Army Publications System (STARPUBS)
310-13	Posting and Filing Publications
385-1	Unit Safety Management
385-3	Protective Clothing and Equipment
710-2-1	Using Unit Supply System Manual Procedures (update)

Table A-1. Recommended Publications

710-2-2	The Supply Support Activity (SSA) Supply System (update)
738-750	The Army Maintenance Management System (TAMMS) (update)
750-1	Organization Maintenance Guide for Leaders
750-35	Functional User's Guide for Motor Pool Operations (update)
TECHNICAL BULLETINS	
5-4200-200-10	Fire Extinguishers
9-2300-295 series	Warranty of Vehicles (see DA Pam 25-30 list for model)
9-2300-422-20	Security of Tactical Wheeled Vehicles
43-0001 series	EIR Digest (Not Stocked. Subscribe on DA Form 12 series)
43-0002 series	(For DSU) Maintenance Expenditure Limits (MEL) or Major End Items
43-003-87	Conversion to Silicone Brake Fluid (Tank-Automotive)
43-0125	Hook-up of Electrical Cables to Mobile Generator Sets
43-0140	Instructions for Preparation of Request for Disposition of Waiver
43-0142	Safety Inspection/Load testing, Lifting Devices
43-0209	Color, Marking, Painting of Military Vehicles
43-0210	Nonaeronautical Equipment: AOAP
43-0211	AOAP Guide for Leaders/Users
43-0213	Rust Proofing Procedures (Tactical Wheeled Vehicles)
43-0239	Maintenance in the Desert
358-3	Military Gas Can
600-1	Licensing Operators (Support Equipment)
746-95-1	Camouflage of Armament
750-25	Maintenance of Supplies, TMDE, Calibration and Repair Support Program
750-651	Engine Antifreeze and Cleaning Compounds
SUPPLY BULLETINS	
3-30-2	Chemical-Biological Canisters and Filters Elements
9-16	Tank-Automotive Winterization Kits
11-6	Dry Batteries Supply Data
11-30	Dry Batteries Handling, Storage and Testing
700-20	List of Army Adapted Items (microfiche)
746-1	Publications: Packaging General Supplies
TECHNICAL MANUALS	
-10/120/-20P	For every item of equipment authorized (Unit Level)
-30/-30P	(For DSU) For all items repaired by the DSU
5-618	Paints and Protective Coating
5-725	Rigging
5-1080-200-10HR	Camouflage Screening System
5-1080-200-13&P	Camouflage Screening System

Table A-1. Recommended Publications

9-243	Use/Care Hand Tools and Measuring Tools
9-2300-422-23&P	AOAP Sampling Valves
9-2610-200-24	Organizational, DS, Care of Pneumatic Tires
9-2610-201-14	Tires: Inspection and Classification
9-6140-200-14	Lead-Acid Storage Batteries
10-7200-200-13	Gasoline and Water Cans
10-8400-201-23	Repair of Clothing and Individual Equipment
11-5800-213L	List of Pub's for Commo/Electronics Equipment
38-600	Admin Vehicle Management
43-0139	Painting Instructions
43-0143	EIR and Maintenance Summary for Tank/auto Equipment
LUBRICATION ORDERS	
	For every item of equipment authorized requiring lubrication
PS MAGAZINE	
	Issues for last three years on hand

27. ARMY OIL ANALYSIS PROGRAM (AOAP):

a. The purpose of AOAP is to:

(1) Detect potential component failure.

(2) Determine oil quality and need for oil change.

(3) Extend oil life and conserve resources.

(4) Reduce maintenance cost through preventive maintenance prior to major repairs.

b. Each unit commander will appoint an AOAP monitor who will be responsible for managing the unit's oil analysis program.

c. The post AOAP coordinator [*local installation POC, address, and phone number*] conducts quarterly certification training for unit monitors IAW established schedule.

d. The unit's AOAP monitor, under supervision of the motor sergeant or maintenance supervisor, will:

(1) Requisition necessary kits and supplies on a timely basis.

(2) Schedule equipment to be sampled.

(3) Take samples in accordance with DA Pam 738-750.

(4) Prepare and submit DD Form 2026 for each sample taken. Take all samples, together with DD Form 2026, to the post AOAP coordinator in Building [*number*].

(5) Take required corrective action on notification from the post AOAP coordinator or the BMO.

(6) Maintain an AOAP publication file.

(7) Ensure that all special samples requested by the lab are taken and submitted immediately.

(8) Send a copy of the partially completed DA Form 3254-R to the support activity when a vehicle or component is work-ordered for maintenance based on lab recommendation. Once completed, DA Form 2408-20 and DD Form 314 are no longer required. Units will use the monthly computerized reports generated by the lab to manage the AOAP.

(9) AOAP for ground equipment is fully computerized. Units will use the monthly computerized reports generated by the lab to manage the AOAP.

28. CALIBRATION OF TMDE:

a. The BMO/NCOIC is the overall battalion coordinator for the calibration of TMDE.

b. He/she receives, monitors, and updates, as necessary, all calibration reports received from the installation calibration facility (Building [*number*], [*your installation, phone number*]) and the S4, [*name*] DISCOM/Support Group. He also distributes calibration-due and delinquency reports to the units.

c. Commanders will appoint a TMDE calibration monitor who will:

(1) Maintain current status of all equipment requiring calibration.

(2) Monitor all calibration reports received from the battalion coordinator and take action as required.

(3) Turn in all TMDE scheduled for calibration to [*your installation facility*].

(4) Pick up calibrated equipment NLT one working day after notification.

d. Calibration printouts (three copies) and cards will be distributed by the S4, [*Name*] DISCOM/Support Group. Battalion BMO will keep a copy of the master and delinquent printout and pass two copies to each unit for appropriate action.

e. Units will confirm printouts, change letter requirements as required, and return one copy, indicating corrective action taken, to BMO. BMO will consolidate printouts and forward them to DISCOM/Support Group S4.

f. Recommended calibration publications that should be on hand include:

(1) TB 43-180.

(2) AR 750-43.

(3) TB 750-25.

(4) Area TMDE Support Detachment External SOP.

29. SAFETY, DRIVER, MECHANIC, OPERATOR AWARDS PLAN:

a. Unit commanders will:

(1) Establish procedures to monitor the number of accident-free miles/hours completed by each driver or operator and the sustained safe, proficient performance of mechanics/repairers.

(2) Recognize vehicle operators who maintain outstanding safe driving records and sections/platoons with outstanding records. DA Form 1118, DA Form 1119, or other forms of recognition will be used.

b. AR 600-8-22 authorizes the issue of driver and mechanic badges for individuals who excel in the operation and maintenance of equipment.

c. Drivers/operators of military vehicles and equipment who have had exceptional driving or operating performance and safety records for at least twelve consecutive months are eligible for safety awards and may have "ARMY EXPERT" or "MASTER OPERATOR" stamped on their operator's permit (AR 600-55).

d. Requests for awards must be coordinated with the battalion safety officer and submitted to the S1 for appropriate action.

30. PRESCRIBED LOAD LIST:

a. All PLL transactions will be IAW the End User Manual for the Unit-Level Logistics System (ULLS), Chapters 4 through 6, using the ULLS-G.

b. For PLL policies and procedures applicable to all units in the battalion, see the ULLS-G paragraph of the SOP and the [*Name*] DISCOM/Support Group's Internal SOP for Unit-Level Logistics System–G.

c. Commanders must ensure that the priority system is not abused; they will monitor and authenticate the use of high-priority requisitions. ULLS-G does not provide an automated function to satisfy this requirement. PLL clerks will produce a Commander's Exception Report each day high-priority requisitions are created and provide it to the unit commander. Commanders must review and sign the report and return it to the PLL clerk to maintain on file.

31. LOCAL PROCUREMENT OF REPAIR PARTS:

a. Authority to place calls against blanket purchase agreements (BPAs) established with local vendors and issued by the [*local contracting office*] will be granted by [*Name, Higher Headquarters*].

b. Only BMO personnel granted authorization from the Chief, Purchasing Division, will act as agents allowed to place calls against BPAs. ***No other individuals in the battalion are authorized to place such calls***.

c. The aggregate amount of purchase transactions will not exceed $1,000.00. Purchases will not be divided to avoid monetary limitations.

d. Individuals from BMO authorized as agents will comply with DOD 5500.7-R and will review the regulation at least semiannually. (A statement must be signed verifying compliance with this requirement and kept on file at BMO to be made available during inspections).

e. Requests for local purchase must be approved and signed by the unit commander. When the following criteria are met, requests will be submitted to BMO using DD Form 1348-6:

(1) The supply system has not responded in a timely manner and has failed to expedite repair parts for NMC equipment.

(2) Low-density equipment, the absence of which will impair the mission, must be repaired.

(3) Equipment being used in critical projects in which the number of pieces of equipment utilized is vital to the project's completion must be repaired.

32. RECOVERY AND DISPOSAL OF RECOVERABLE COMPONENTS:

a. Commanders will ensure the PLL clerk and maintenance personnel know how to use the FEDLOG. Also, a copy of CDA Pam 18-1 must be available and used.

b. The recoverability code is a one-position alphabetic code (Column RC of the AMDF). This code identifies the level of maintenance allowed to *dispose* of the item when it can no longer be used.

c. Recoverable parts and assemblies will be disposed of IAW subject codes NLT three working days after their removal.

33. UNIT-LEVEL LOGISTICS SYSTEM:

a. Automated procedures for dispatching, TAMMS, licensing, and PLL will be in accordance with the End User Manual for the Unit-Level Logistics System (ULLS), with this paragraph, and with [*name*] DISCOM/Support Group's Internal SOP for the Unit-Level Logistics System.

b. The following processes must be accomplished by all units at indicated intervals:

(1) Daily:

(a) C12 - Excess report/CDR; exception report (run before U31).

(b) U31 - Send transaction to DSU.

(c) U32 - Send previous transaction to DSU (run immediately after U31 to make a backup copy of the diskette).

(d) C43 - Automatic status processing.

(e) M52 - Update maintenance request status.

(f) F32 - Backup ULLS-G data files (this process must be done at the end of the business day).

(g) M20 – Motor equipment utilization record return (if necessary).

(h) M75 - Equipment availability report

(i) C54 - Demand history add (as it occurs).

(2) Weekly:

(a) C70 - Zero balance report.

(b) M20 - Purge control log.

(c) M17 - Parts received not installed.

(d) M85 - DCR/deadline data file reconciliation (must be run prior to U35).

(e) U35 - Deadline data.

(3) Biweekly:

(a) C20 - Request for follow-up.

(b) C80 - PLL/DCR reconciliation.

(4) Monthly:

(a) C60 - Demand history analysis.

(b) C75 - PLL update.

(c) C65 - PLL inventory.

(d) C8B- Catalog update.

(e) C85 - DCR purge.

(f) C24 - DCR print with history.

(g) M60- Scheduled maintenance due.

(h) C55 - Excess management.

(5) Annually: M26 - Periodic usage report.

(6) Keep on File:

(a) M40 - Report of all operators individually (Automated Form 348).

(b) C60 - Demand analysis (monthly requirement).

(c) C65 - PLL inventory (monthly requirement).

(d) C85 - Purge inventory (monthly requirement).

(e) M20 - Purge control log.

(f) M80 - Fuel usage.

(g) M65 - Scheduled services performed.

(h) M94 - Equipment data file.

(i) M85 - DCR/deadline reconciliation (weekly requirement).

(j) M51 - Maintenance request register.

(k) C22 - DCR inquiry (all open records).

(7) As Required: M20 - Alert dispatch.

34. SUGGESTION PROGRAM/PROJECT SMART:

a. Commanders will encourage soldiers to participate in subject programs.

b. Project SMART is designed to improve combat readiness through the individual soldier's evaluating and recommending changes in Army logistical doctrine, policy, and procedures. Ideas may be submitted by anyone, regardless of rank. No command approval is required.

c. Suggestions should be in writing using the following format:

(1) To Project SMART.
(2) Date.
(3) Reference (if any).
(4) Current problem/procedure (please print).
(5) Recommendation for improvement (please print).
(6) Full name.
(7) Address.

(8) Send the suggestion to:
PROJECT SMART/TIPS
DIRECTOR OF COMBAT DEVELOPMENTS FOR CSS
3901 A AVENUE SUITE 220
FT LEE VA 23801-1809

d. Individual will receive written notification that the suggestion was received and is being evaluated. If the suggestion is adopted, individual may qualify for a monetary or impact award.

e. Any other suggestions geared toward increasing productivity, improving working conditions, reducing likelihood of accidents, or improving morale should be submitted on DA Form 1045. A more complete definition and details on how to use DA Form 1045 are found in AR 672-20.

f. Suggestions on using DA Form 1045 will be routed through the battalion S4 for processing and evaluation.

35. SUBMISSION OF QUALITY DEFICIENCY REPORTS:

a. All Army materiel is subject to Quality Deficiency Reports (QDRs) and Equipment Improvement Reports (EIRs). The purpose of submitting a QDR is to report conditions below standard-quality workmanship (shoddy construction). The purpose of the EIR is to report materiel faults in design, operation, or manufacture.

b. The unit that identifies the need for a QDR or EIR is responsible for reporting the condition under AR 702-7 and DA Pam 738-750.

c. SF 368 will be used to report equipment quality deficiencies and to suggest ideas or make recommendations to improve such equipment.

36. EXTERNAL ASSISTANCE:

a. Unit commanders are encouraged to utilize all the external assistance available to them in this installation.

b. Prepare a listing of available assistance in supply and maintenance disciplines.

37. WARRANTY PROGRAM FOR NEW EQUIPMENT:

a. The warranty coordinator (WARCO) provides information and assistance to units supported by the Maintenance Division, DOL [*list WARCO information*].

b. Warranties cover defects in materials or workmanship, usually for a specified time. Some warranties run for a remarkably long time.

c. Warranties don't usually cover things that go wrong because of:

(1) Neglect.

(2) Improper or unskilled operation.

(3) Installing wrong parts.

(4) Floods, hail storms, tornadoes, etc.

(5) Alterations of any kind.

(6) Improper or unskilled repairs.

(7) Combat.

d. Warranties generally don't cover high-usage or high-expected-failure-rate parts, such as filter elements, electronic tubes, bulbs, fuses, belts, and hoses. The exception is when a failure covered by the warranty causes any of these parts to also fail.

e. Warranty work can generally be done either by Army maintenance activities or by the manufacturer or its dealerships, whichever the Army prefers in each case. To get repairs for the following types of equipment, call the BMO, who will, in turn, call the WARCO:

(1) Items requiring Equipment Control Records (DA Form 5992-E).

(2) Nontactical vehicles such as sedans, trucks, and buses operated from transportation motor pools.

(3) Engine-driven items costing over $3,000, such as riding mowers, compressors, generators, and pumps.

f. If the work is to be done by a dealership, units will be advised to submit a DA Form 5990-E IAW DA Pam 738-750 to the WARCO office. The WARCO will assign a job order number and monitor the repairs to completion. Before units attempt to perform repairs of items of equipment under warranty, contact the WARCO for authorization and coordination.

g. Small, inexpensive items like toasters, fans, push mowers, tools, vacuum cleaners, and air conditioners are usually covered by "Trade Practice" warranties. The Army has the same warranty rights as private purchasers have. If the item is new or not yet heavily used and it appears to have failed as a result of a defect in the manufacturer's materials or workmanship, call the WARCO to help you pursue warranty repairs.

38. SUBMISSION OF MAINTENANCE REPORTS TO BATTALION:

a. All units will submit to BMO, together with the end of the month DA Form 2406, a report itemizing the previous month's performance in the following areas:

(1) AOAP – samples due, number taken, number delinquent, reason for failing to comply with standards.

(2) Calibration – number of TMDE due, number delinquent, reason for failing to comply with standards.

(3) PLL – number of lines, number of zero balances, problems experienced with supply system.

(4) Roadside inspections – number inspected, number passed, number failed, what's being done to prevent similar failures.

(5) Scheduled services – number due by type: monthly, quarterly, semiannually, annually; number performed; number delinquent; reason for failing to comply with standards.

b. Input from units will be consolidated by BMO and discussed by battalion executive officer during the monthly DISCOM/Support Group maintenance meeting with the DISCOM/group commander and during the monthly maintenance with the battalion commander.

39. PREPARATION AND SUBMISSION OF MATERIEL CONDITION STATUS REPORT (DA FORM 2406):

a. Reports are due to BMO as follows:

(1) Weekly: Due every Thursday NLT 1300. Any daily changes, additions, or deletions must be called in to BMO as they occur.

(2) Mid-Month: Two working days prior to the 15th NLT 1300 hours. Front and back of DA Form 2406 must be signed by the unit commander IAW AR 700-138.

(3) End of Month: Two working days prior to end of the month. Backside only of DA Form 2406 is completed. Status of parts requisitioned at unit level to repair NMC reportable equipment and explanation for deviation from standards are a must in this report.

b. Unit commanders must ensure DA Form 2406 is prepared IAW AR 700-138. Items must be listed by LIN sequence, and model numbers (column c) must be exactly as they appear in Appendix. B of subject regulation.

c. In addition, all units will provide their PLL status on the right-hand side of block 11 (remarks) of DA Form 2406 using the following format:

(1) Unit's DODAAC.

(2) Lines authorized in PLL.

(3) Total lines with zero balance.

(4) Percentage (%) of lines with zero balance.

d. All parts needed to repair NMC equipment at unit level must be listed in Column i of DA Form 2406 or on an additional sheet, when required. Include the following:

(1) NSN part number.

(2) Part nomenclature.

(3) Document number (Column h).

(4) Current status of requisitions (Column h).

e. Contact BMO for assistance to get latest status of requisitions using the Logistics Intelligence File (LIF).

NOTE

If your unit is operating under the automated materiel status system (AMSS), replace the discussion on DA Form 2406 with the procedures your unit uses to manage AMSS reporting.

Appendix B

Sample DS-Maintenance External SOP

1. PURPOSE: To establish policies and procedures for direct support (DS) level maintenance to units supported by the *[Unit Name]*.

2. SCOPE:

a. This SOP applies to all units provided primary or backup DS-level maintenance by the *[Unit Name]* in the following categories:

(1) Tactical vehicles and trailers.

(2) Weapon systems (small arms, artillery, fire control).

(3) Missile and air defense systems.

(4) Communications-electronics equipment (special electronic devices, radar, optics).

(5) Construction-engineer equipment.

(6) Power-generation and light engineer equipment.

(7) Air conditioning and refrigeration.

(8) Quartermaster and chemical equipment.

(9) COMSEC.

(10) Allied trades (welding, body and fender, radiator repair, glass, light duty fabrication, and machining).

(11) Canvas and tentage.

(12) Topographic equipment.

(13) Fuel and electric components.

(14) Batteries.

b. General support (GS) level maintenance is provided on printed circuit cards and boards for all SINCGARS radios and fire-finder equipment. Note that printed circuit cards and boards will be job-ordered to the *[Name]* Maintenance Detachment by DOL only. All unserviceable printed circuit cards or boards will be turned in to the SSA for further evacuation to DOL. Any other GS-level equipment repairs require the authorization of the Chief, Maintenance Division, DOL.

3. RESPONSIBILITIES:

a. Materiel maintenance is a command responsibility with the primary purpose of sustaining equipment in a fully mission-capable status. Each unit will maintain and repair equipment at the lowest level of maintenance within the capability and authority to perform the work. Unit-level maintenance actions will be accomplished prior to work-ordering equipment to DS-level maintenance.

b. The *[Unit Name]* is responsible for providing direct-support-level maintenance to divisional/nondivisional units and backup maintenance for *[Name(s) of Designated Unit(s)]*. Procedures outlined in paragraph 4 (Procedures) of this SOP apply to all customers.

c. The *[Unit Name]* is also responsible for providing technical assistance and liaison visits to customer units. Enhanced readiness can be obtained when problem areas and support requirements are determined and mutually addressed. Technical assistance includes:

(1) Advice, assistance, and training pertaining to the installation, operation, modification, maintenance, and recovery of materiel.

(2) Assistance in the evaluation of the condition of materiel and the effectiveness of unit-level maintenance for supported units.

(3) The coordination of warranty claim actions pertaining to organic or supported unit material or the processing of warranty actions through the installation WARCO.

d. Recovery of equipment is the responsibility of the owning unit. Backup recovery support will be provided by the *[Unit Name]* after coordination with the *[Name(s) of Designated Unit(s)]* support operations office and the [*Unit Name*] maintenance control section. Telephonic requests are acceptable; however, submission of a follow-up Maintenance Request (DA Form 2407) is required. Detailed information must be provided to describe the equipment, its problems, location, and point of contact.

e. The Army Oil Analysis Program (AOAP) is a mandatory responsibility at all levels of command. The AOAP is outlined in detail in AR 700-132, AR 750-1, TB 43-0211, appropriate TBs, TMs, and local SOPs. Direct-support-level maintenance mandated by the oil-sampling lab will be job-ordered to the *[Unit Name]* for component replacement. *[Unit Name]* will take an oil sample and send it to the lab on any equipment submitted for repair, upon acceptance, to verify the need for component replacement. The unit submitting the job order is required to also provide the *[Unit Name]* with the appropriate filters and oil in order for a sample to be taken by the *[Unit Name]* during final inspection to ensure that the problem has been corrected.

f. The Maintenance Management Improvement Program (MMIP) is the responsibility of all commanders; it provides executable actions and information for the improvement of maintenance management, operations, procedures, and techniques. AR 750-1 outlines the MMIP, which is designed to raise a unit's overall readiness condition.

g. Sample data collection is a command responsibility; it will be conducted under approved collection plans IAW AR 750-1.

h. Controlled exchange of parts for equipment job-ordered to the *[Unit Name]* will be done only with the owning unit's written authorization signed by the battalion commander. The shop officer will advise customer units when a controlled exchange is desirable for increased readiness. All controlled exchanges will be performed IAW AR 750-1.

i. Supervisory responsibility for the care and safekeeping of government property issued to, or used by, subordinates is inherent in supervisory positions. Proper preservation, handling, and packing of materiel and equipment in the maintenance and supply chain is therefore incumbent upon all supported units as well as the *[Unit Name]*. Improperly packaged items will be rejected.

j. The *[Unit Name]* commander is responsible for establishing quality control and quality assurance procedures that will assure product quality and reliability. If at any time customers are dissatisfied with work performed by the *[Unit Name]*, they should immediately call the maintenance control officer, company commander, or the support operations officer, [*Unit Name*]. Telephone numbers are listed in the applicable appendix.

4. PROCEDURES:

a. General:

(1) Materiel and equipment will normally be accepted for repair or classification, pending technical inspection, on the days and hours listed below:

NORMAL CUSTOMER SUPPORT HOURS

Monday	0900-1500
Tuesday	0800-1500 (Pacing items only, training day)
Wednesday	0900-1500
Thursday	0900-1500
Friday	0900-1500

NOTE: Support during other than normal duty hours is best accomplished through prior coordination between the *[Unit Name]* and supported units. For high-priority work orders after duty hours, on weekends or on holidays, call *[Unit Name]*'s CQ at *[phone number]*. The *[Unit Name]* will be open until *[time]* on military pay days.

(2) The Maintenance evacuation chain is depicted below:

[SUPPORTED UNITS (NORMAL)]	***[SUPPORTED UNITS (BACKUP)]***
CUSTOMER UNIT	CUSTOMER UNIT
↓	↓
[Unit Name]	DISCOM SPT UNITS
↓	↓
DOL	*[Unit Name]*
	↓
	DOL

NOTE: The *[Unit Name]* will evacuate GS-level repair work directly to DOL using internal maintenance assets.

(3) Customer units are requested and encouraged to make use of both telephonic and personal coordination with the [*Unit Name*] Support Operations Officer, [*Unit Name*] Company Commander, maintenance control officer (MCO), or maintenance control supervisor (MCS) on maintenance support issues. Commanders at all levels are encouraged to visit at any time, especially on assumption of command.

(4) All maintenance activity by customer units in the [Name] shop area are to be coordinated with the maintenance control section. Visitors are required to contact the MCO or MCS upon arrival in the shop area. Customers are not permitted in any shop area without escort from the maintenance control section.

(5) All special support requirements (field exercises, maintenance support teams, etc) must be coordinated through [*Major Subordinate Command Unit Name*], Support Operations Office. Divisional requests should be coordinated thorough the DMMC, DISCOM, and G4 where appropriate. Inclusion of support personnel in planning meetings is strongly encouraged and should prove mutually beneficial.

(6) Equipment submitted for repair will have the following supporting documents:

(a) Maintenance Request, DA Form 5990-E. Blocks 1b and c, 5-34b, must be filled out completely and correctly IAW DA Pam 738-750. Special attention should be given to completing entries in blocks 6-13. Block 24 will contain a description of deficiencies. 'Repair as required' is not a description of a problem and will not be accepted. The telephone number of the unit submitting the work request and the bumper number of the vehicle must be annotated on the work request.

NOTE: Direct Support Maintenance Unit determines how many items will be accepted on a single maintenance request.

(b) One copy of DA Form 5988-E noting faults found during PMCS will accompany DA Form 5990-E. The DA Form 5988-E will be signed by the maintenance supervisor, maintenance officer, or designated representative. Equipment will not be accepted by the *[Unit Name]* without a completed DA Form 5988-E. Materiel evacuated through DISCOM maintenance units must also be accompanied by the owning unit's 5988-E to ensure accountability of components. Any unit-level nondeadlining faults requiring parts will have a document number with assigned DODAAC annotated on the DA Form 5988-E. If an item is rejected after the initial inspection by the *[Unit Name]*, the supported unit has 72 hours to correct unit-level deficiencies or provide document numbers for faults requiring repair parts. Failure to comply with the 72-hour rule will result in the submission of another work request and a reinspection of the equipment by the *[Unit Name]* inspectors. All unit DA Form 5988-E accompanying work requests must identify failed tests in the STE-ICE go/no-go chains directing DS-level maintenance. These readings will assist the technical inspectors in making repair determinations with greater efficiency and accuracy.

(c) All equipment requiring historical records IAW DA Pam 738-750 will be work-requested with the appropriate historical records present.

(d) Units on the ULLS-G systems will submit ULLS-G-generated DA Form 5990-E along with ULLS-G diskette. The diskette will be read by the SAMS-1 computer and a job order number will be assigned. Additionally, the diskette will be updated and returned to the customer with job status.

(7) Priority Authentication:

(a) All maintenance requests (DA Form 5990-E/2407) with an issue priority designator (IPD) of 01-10 will be authenticated by the unit commander or his/her designated representative (as listed on a DA Form 1687) by placing his or her signature in the block marked "PD Authentication."

(b) Personnel authorized to submit or receive equipment on DA Form 5990-E must be designated on a DA Form 1687, filled out IAW DA Pam 710-2-1. Include in the remarks block the unit's phone number, commander's name, and the statement, "form executed for work request purposes." Work will not be accepted or released where proper delegation of authority does not exist.

(c) Supported units will provide the maintenance control section with one copy for a current signature card and a copy of the commander's assumption of command orders. The DA Form 1687 must be kept current and should be reviewed every 90 days, updated every 12 months, whenever there is a change of command, or when new personnel are sent to turn in and pick up equipment. No more that three full DA Forms 1687 will be submitted per supported unit and as necessary from units receiving backup support.

(8) Large numbers of work requests should be coordinated with the shop officer or maintenance control supervisor prior to submission. Vehicles with shelters should also be coordinated to see if removal is required.

(9) Low priority includes deferred maintenance, cosmetic repairs, MWOs, special equipment installation, and equipment requiring maintenance or repair for which the owning commander or his designated representative has authorized a delay in correcting the fault. A safety technical inspection will be required for deferred maintenance candidates. The equipment will be released to the unit pending the requisition of required parts. Upon receipt of the required parts, the unit will be contacted to return the equipment for repair; or a maintenance support team may be dispatched to perform the maintenance on site. Prior to work starting on a deferred job, a 100 percent technical inspection will be performed. Upon notification, the unit has 24 hours to return deferred equipment for repair. Noncompliance will result in job order closure.

(10) Upon demand, job status printouts will be available containing the latest status of all open work requests. Additional status information will also be available to commanders and maintenance officers only upon request. This includes information on DSU nonavailable days required for DA Form 2406 computation. The DSU job order number (annotated on the receipt of DA Form 5990-E) should be used when checking the status of specific items.

(11) A fully staffed and equipped maintenance support team may be furnished to complete required work. Teams will be established based on the most economical maintenance support responsiveness required to maximize combat time by minimizing repair and evacuation time. Coordination for all maintenance support teams must be made through [*Unit Name*] Support Operations Office to prevent confusion or waste of efforts.

(12) Materiel under warranty will be so identified; actions will be completed IAW AR 700-139 and reported under DA Pam 738-750. Unit readiness and mission effectiveness will take priority over warranty actions. Should warranty problems occur, notify the unit warranty coordinator. The warranty coordinator will notify the [*Installation Name*], Maintenance Division of the warranty problem. Authorization of the proper action will be provided at that time.

(13) Changes to a unit's equipment density impact heavily on the *[Unit Name]*'s abilities to provide adequate support, i.e., repair parts stockage, technical publications, training, special tools, etc. Therefore, each supported unit is required to provide a density list updated each October 15th. The following format is required:

LIN# ERC NSN MOD/NOUN AUTH/OH

The unit's property book hand receipt should be the basis for preparation of the density list. A unit roll-up or similar document will be sufficient for the *[Name(s) of Designated Unit(s)]*. Changes in the density list must be provided to the *[Unit Name]* as soon as possible for maximum support readiness.

b. Turn-In Procedures and Inspection: Materiel submitted to the *[Unit Name]* for repair and return to user, transfer, or turn-in will be serviced and repaired to the standards specified in materiel publications which apply to DS-level maintenance. Equipment meeting the conditions for repair at DS/GS-level maintenance will be job-ordered to the receiving clerk in the maintenance control section. Forms will be checked for completeness and correctness to ensure that all required documents are attached.

(1) Completeness of equipment: Missing components or assemblies not required for DS/GS-level maintenance will be noted on the Equipment Inspection and Maintenance

Worksheet (DA Form 5988-E) prior to acceptance. Equipment will be rejected if component assemblies are missing that would prevent performance, required DS/GS-level maintenance, or safe testing, inspection, and diagnosis of the equipment. All vehicles will have an operator's seat. Certain pilferable items must be removed as specified in the applicable appendix. The *[Unit Name]* will not be responsible for loss or damage of equipment left unsecured in the shop area that has not been inspected and accepted.

(2) Damaged/missing equipment: Items that are damaged or missing parts that are determined to be the result of other than fair wear and tear will be accepted for estimated cost of damage (ECOD) and repair. The responsible officer or commander will be notified so he or she may take actions in accordance with AR 735-5. Repairs will not be accomplished without a release statement authorizing the repair of ECOD equipment or, if negligence is not involved, a statement signed by the unit commander stating the cause of the damages. Requests for actual cost of damage (ACOD) must be coordinated with the maintenance control officer. The *[Unit Name]* will reject fair wear and tear statements for equipment clearly damaged due to negligence.

(3) DS/GS-candidate vehicles: Vehicles will be accompanied by an organizational mechanic equipped with a general mechanic's toolbox to correct deficiencies that would otherwise result in rejection. The inspections performed IAW TM -10/-20 standards will include, but are not limited to:

(a) Brake system: Master cylinder fluid level will be checked. Any leaks in brake systems, including the air supply system, will be cause for rejection.

(b) Parking brake: The parking brake will be inspected for any deficiency making it unsafe, such as adjustment, operation, lining wear, and incorrect mounting. Safety is the primary consideration.

(c) Battery-charging system: The battery compartment will be inspected for proper installation of batteries and loose or disconnected terminals. Specific gravity reading will be checked for level of charge. Specific gravity on fully charged batteries should be at least 1225. Generator and alternator charging systems will be checked for correct output (TM 9-6140-200-14).

(d) Electrical system: The electrical system will be inspected for loose or bare wires, dash panel gages' operation, and warning lights.

(e) Engine compartment: All fluid levels will be checked (engine oil, power steering fluid, automatic transmission fluid, and coolant). Leaks of any kind, including oil, fuel, and water, will be noted for appropriate action.

(f) Major components: All major components, i.e., axles, transmissions, and transfers, will be checked for low oil levels and contamination. Breather vents will be checked for proper ventilation.

(g) Tires: Tires will be serviceable and inflated to the proper pressure. The unit will be notified to change flat tires on its job-ordered equipment if tires deflate within 48 hours.

(h) Cleanliness: Vehicles must be cleaned to permit technical inspection, repair, or proper evaluation. The steam cleaner at the *[Unit Name]* is available only at the inspector's discretion. All vehicle undercarriages will be free of dirt, oil, and grease.

(i) Fuel: All vehicles will have at least a three-fourths tank of fuel. Fuel tankers and pods will be drained of all fuel and flushed prior to acceptance. A statement signed by the company commander certifying system flush is required.

(j) Security: All vehicles will have a means to be secured (lock, keys, welded chain, or similar device).

(k) Safety: All vehicles and trailers will have a pair of chock blocks for proper cribbing when parked or worked on.

(4) Inspection/analysis: In addition to the technical inspection conducted to determine the condition of each item or piece of equipment, a follow-on economic analysis will be made to determine whether the item qualifies for repair or turn-in/evacuation. Materiel will be considered economically reparable when the estimated cost is less than the overhaul cost specified in the applicable TB 43- and TB 750-series manuals.

(5) Electronic equipment: All electronic equipment must be tagged to indicate the unit, nomenclature, model number, and serial number. Night vision equipment will only be accepted with charged batteries, protective cover, carrying case, and headset. Mine detectors will be job-ordered with charged batteries. Evidence of unauthorized work or modification will be cause for ECOD and investigation if damage to the equipment results. Repair of communications and sensitive equipment constitutes considerable expenditures of time and money. Military vehicles must be used to turn in or pick up electronics equipment; they are subject to inspection by shop section personnel to ensure suitability. Repaired electronic equipment will not be released to customer unless sufficient cushion and or bracing material is used in truck beds. Salvage mattresses are adequate for this purpose. There are no exceptions to this rule. The shop section will not provide cushioning or bracing.

(6) Armament equipment: All armament items submitted to the *[Unit Name]* must be complete and thoroughly cleaned. Aiming circles, compasses, binoculars, sight units, and gunner's quadrants will have protective covers or carrying cases. Ammunition and explosives will be removed, as well as all rifle slings, prior to turn-in. Units picking up weapons will prevent any unnecessary damage to the weapons while returning them to the unit's arms room. The following will be accomplished before submitting any job:

(a) Fire control:

1. Aiming circles, compasses, binoculars, sight units, and gunner's quadrant will have protective covers or carrying cases.

2. Sight units will be turned in free of dirt and oil.

3. Howitzer mounts needing maintenance will be job-ordered separately from the howitzer.

4. Sights damaged not due to fair wear and tear will need a damage statement. This statement must be signed by the unit commander and endorsed by signature of the next higher command.

(b) Artillery:

1. Borescoping/pullover gaging criteria as defined in TM 9-1000-202-14 must be strictly adhered to. All tubes must be cleaned and free of carbon buildup in order to obtain an accurate reading. An overdue borescoping and pullover gage inspection is cause for the weapon system to be deadlined.

2. Requests for borescoping will be turned in 30 days before due date on DA Form 2408-4. Requests will be made by memo for record from the motor officer to the maintenance control section. DA Form 5990-E will be turned in to the maintenance control section by the customer on the last working day prior to the inspection.

3. Gun tubes will be cleaned the day before, with only a light coat of oil left in the tube.

4. Semiannual services will be performed and verified on DA Form 5988-E by the motor officer or section NCOIC before requests for annual services are accepted.

5. Organizational maintenance will perform a 100 percent technical inspection in accordance with crew and organizational technical manual covering the weapons system. A copy of the DA Form 5988-E will be turned in with the DA Form 5990-E when requesting an annual service.

6. Howitzers must have appropriate covers on guns to prevent rusting.

(c) Small arms:

1. All ammunition and explosives will be removed, weapons will be cleaned, and rifle slings will be removed before turn-in.

2. Weapons must be tagged with the unit designation and the serial number.

3. The M203 grenade launcher will not be separated from the M16 rifle when repair work is needed on either weapon. Both serial numbers will be annotated on the work request.

4. Crew-served weapons will be put on separate job orders.

5. Mortars will be accompanied by their logbooks.

6. Borescoping/pullover gaging criteria, as defined in TM 9-1000-202-14, must be strictly adhered to. Tubes must be cleaned and free of carbon buildup in order for an accurate reading to be obtained. An overdue borescoping and pullover gage inspection is cause for the weapon system to be deadlined.

7. M60 machine guns turned into maintenance for annual gaging will be submitted with their spare barrels.

8. All annual gaging for M16s will be by appointment only. This action should be requested by a memo to the shop office. The memo will state the number of M16s, date preference, location of arms room, and POC's name and phone number. The memo is signed by the unit commander.

9. For allied trades welding, machine shop, and fabrications, some fabrication capabilities exist within the *[Unit Name]*. Supported units requesting fabrication of items will follow the procedure outlined for normal support with the following exceptions:

a. A detailed drawing, complete with dimensions, etc., must be attached to the work request. When possible, a "like" item should be submitted with the maintenance request so the section doing the fabrication can see a finished product. This saves time and questions.

b. Units will not submit requests to modify military equipment without proper authorization, i.e., modification work order (MWO), TM recommendations, or a letter from the commander explaining the modification. In any event, the [*Unit Name*] will have the final authority in applying the change.

c. Since fabrication of items tends to be very costly in terms of man-hours and materials, all efforts should be made to procure the item from normal supply channels.

d. Radiators must be complete and every precaution must be taken (bracing and padding) to ensure that no further damage occurs to the radiator.

e. All canvas/camouflage jobs must be cleaned and dried with organizational repairs complete prior to turn-in.

(7) COMSEC:

(a) All CCI equipment will be zeroed prior to turn-in. Nonsecure items will be noted through the [*Unit Name*] COMSEC custodians.

(b) Lost unkeyed CCI equipment will be documented through the unit's S2 to [*Unit Name*].

(c) Qualified repairers will inspect all CCI equipment per COMSEC Maintenance Training and Experience Record, DD Form 1435.

(d) Remove fill batteries for all CCI equipment prior to turn-in.

(e) Modifications of equipment for painting, stenciling, etc are not authorized and will not be accepted at turn-in IAW AR 750-10.

(8) Fuel and electric:

(a) Items noticeably damaged due to negligence require a damage statement.

(b) The 60-amp generator, stock number 2920-00-909-2483, requires installation of the adjustment plug; otherwise, a missing part statement is required.

(c) Wiring harness jobs or electrical problems on military vehicles require the inspection section to inspect the vehicle first.

(d) All components job-ordered to the fuel and electric shop must be cleaned of excess dirt, oil, and water before acceptance. Usually, this responsibility falls on the unit that job-ordered the equipment.

(9) Battery shop:

(a) Batteries job-ordered to the *[Unit Name]* are not required to be drained prior to turn-in. They will be secured to pallets with the positive and negative posts taped to prevent shorts or sparks. Battery caps must be serviceable and securely affixed to the batteries. Unserviceable batteries found to be leaking or cracked will be drained by the *[Unit Name]* Battery Shop prior to return to customer.

(b) *[Unit Name]* and division tech supply activities will turn in unserviceable batteries to the DRMO on a DA Form 2765. The turn-in activity will deliver batteries to the DRMO on an appointment basis.

(c) Palletized batteries will be placed either sideways or upside-down, stacked no more than two high with plywood separating the levels. Nonmetallic spacers will be placed between all batteries. Additionally, nonmetallic strapping will be used; do not use banding.

(d) DD Form 1577 is required for turn-in of unserviceable batteries to DRMO.

(10) Engineer shop:

(a) Power generator equipment:

1. All job-ordered equipment will be accompanied by DA Form 5988-E (unit's copy). Work-ordered equipment will not contain organizational faults. Organizational parts that are missing from equipment will contain bona fide document numbers with DODAAC on the organizational copy of DA Form 5988-E.

2. A five-gallon can of fuel will accompany generators without fuel tanks.

3. Fully charged batteries are required on all battery-started equipment.

4. Equipment will not be accepted for repair with Class I or Class II oil leaks. If equipment contains a Class III leak, the leak must physically drip from the equipment.

5. If equipment is job-ordered on a priority 013 for a routine modification work order and a non-mission-capable fault is discovered, the owning unit will be advised to submit a job order for the non-mission-capable fault found. The MWO job order will be closed out and the modification completed under the NMC fault work order.

(b) Air conditioning and refrigeration quartermaster and chemical equipment:

1. All organizational-level faults will be corrected prior to submitting the equipment for job order. Missing organizational parts will be documented on the organizational copy of DA Form 5988-E.

2. A copy of the applicable technical manual is required to accompany the equipment at the time of initial inspection.

3. Equipment required to be purged will be submitted with a purging statement. Equipment will not be accepted without a purge statement.

4. Damaged equipment requires a damaged statement, authenticated by the unit commander or his designed representative.

5. Equipment operators or individuals knowledgeable of equipment must be present for job orders repaired on site.

(c) Heavy-lift/construction equipment:

1. Equipment will be accompanied by a DA Form 5988-E (unit's copy). Equipment being submitted for DS-level repairs will contain no organizational faults. Organizational parts missing from equipment will contain bona fide document numbers with DODAAC on the organizational copy of DA Form 5988-E.

2. Fully charged batteries are required for all battery-started equipment.

3. Heavy construction equipment rollover protection safety (ROPS) will be fully in place on the equipment prior to submission of job order.

4. All bulldozers will have blades removed prior to submission of job order.

5. Equipment required to be tested in accordance with TB 43-0142 will meet applicable requirements prior to submission of job order.

6. Equipment required to be tested in accordance with TB 43-0151 will meet applicable requirements prior to submission of job order.

7. Tires on heavy construction and material-handling equipment must contain air for a period of 48 consecutive hours. If tires go flat, the unit will be notified to execute repairs as soon as possible.

8. Equipment will not be accepted for repair of Class I or II leaks. If equipment is job-ordered for Class III leaks, the leaks must meet the criteria of a bona fide Class III leak and physically drip from the equipment.

c. Upgrading of Priority Designators:

(1) Priority of work will be given to a unit's pacing items and ERC A-line items. Maintenance requests are then prioritized by the unit-level priority designator and date of receipt. Generally, the highest priority oldest job will be worked first.

(2) When it become necessary to upgrade the IPD before a maintenance request has been completed, the commander should notify the maintenance control section in writing.

(3) Commanders should be aware of priority misuse within their own organizational maintenance area. Suspected misuse of priority found by the *[Unit Name]* will be forwarded to the appropriate commander.

d. Notification and Pickup of Repaired Equipment:

(1) Supported units will be notified by the *[Unit Name]* when completed work requests are available for pickup. The name of the person notified and the date notified will be recorded with the work request. Once notified, supported units are expected to expeditiously pick up materiel or equipment. The following time frames will be adhered to:

IPD	PICK UP WITHIN
01-03	1 working day
04-10	1 working day
11-15	2 working days

(2) Customers failing to pick up equipment after proper notification will be sent a letter of notification. This letter will advise them of impending termination of work order service by the *[Unit Name]*. Lack of immediate action or response will be so noted in a second letter to the customer's battalion commander.

(3) The Number 1 (green) copy of DA Form 5990-E is required for pickup of equipment and will be surrendered upon receipt of the equipment. If this copy has been lost, the supported unit will provide a statement verifying that the copy of DA Form 5990-E has been lost. This statement will be signed by the unit commander or acting commander.

(4) Repair of communications and sensitive equipment constitutes considerable expenditures of time and money. Military vehicles must be used to turn in or pick up electronic equipment and are subject to inspection by shop section personnel to ensure suitability. Repaired electronic equipment will not be released to customers unless sufficient cushioning and bracing material is used in truck beds. Salvage mattresses are adequate for this purpose. There are no exceptions to this rule. The shop section will not provide cushioning or bracing material.

(5) Units picking up weapons will have a weapons rack or cushion to place the weapons on if there are more weapons than one person can hold. This will prevent any unnecessary damage to weapons while returning them to the unit's arms room.

(6) Personnel from supported units who pick up equipment are encouraged to inspect the quality of the work prior to signing for it. Questionable work by the *[Unit Name]* will be brought to the maintenance control officer's attention immediately.

(7) A 100 percent serial number joint inventory will be conducted on components to ensure that units are not picking up another customer's equipment, e.g., weapons.

e. Divisional ORF:

(1) Customer unit will:

(a) Ensure that all organizational deficiencies are corrected and accepted for the direct support faults for which the equipment was placed on work order and that it meets the TM -10/-20 standards.

(b) Prepare necessary paperwork for float exchange (IAW float MOA).

(c) Owning unit must provide the *[Unit Name]* with an ULLS-G diskette containing equipment data.

(2) Maintenance control officer will:

(a) Maintain records IAW AR 750-1 and DA Pam 710-2-2.

(b) Ensure that SAMS 1 operators perform ORF transactions IAW SAMS 1 User Manual ALSM 18-L21.

(c) Ensure that float candidate is reparable at DS-level or DOL before the transaction occurs.

(d) Authenticate and date DA Form 5990-E IAW DA Pam 710-2-2.

(3) ORF transactions will not be delayed due to nonavailability of parts required at the unit level (IAW float MOA).

(a) The unit will install all needed repair parts from its PLL.

(b) If repair parts are not available, the unit will cross-level the necessary parts from the float to the equipment job-ordered prior to completion of the transaction.

(c) The *[Unit Name]* Float Section will not pick up job-ordered equipment that was floated if it does not meet 10/20 standards or if it is missing any parts, whether organizational or DS-level.

(4) The following steps are established for ORF procedures. [*Insert local ORF procedures here.*]

(5) When ORF equipment items are needed for a deployment, the maintenance control officer will sign for all equipment along with any historical documents. The maintenance control officer will then follow established procedures. Any equipment job-ordered for maintenance will be correctly updated at the maintenance control section. A joint inventory will be conducted and all supporting documents will be properly executed prior to the maintenance control officer's release from his responsibilities.

Glossary

1SG	first sergeant
abf	asset balance file
abn	airborne
ACCP	Army Correspondence Course Program
acctg	accounting
acft	aircraft
ACL	area calibration laboratory
ACOD	actual cost of damage
ACofS	Assistant Chief of Staff
ACR	armored cavalry regiment
ADA	air defense artillery
admin	administrative
ADP	automated data processing
ADPE	automatic data processing equipment
ADPU	automatic data processing unit
adrp	airdrop
aff	affairs
AFRTS	American Forces Radio and Television Service
AIM	armor-infantry-mechanized
ALOC	air lines of communication; administrative/logistics operations center
amb	ambulance
AMC	Army Materiel Command
AMCO	aviation maintenance company
AMCOM	US Army Aviation Missile Command
AMDF	Army master data file
AMMH	annual maintenance man-hours
ammo	ammunition
AMMS	Army Materiel Status System
AMRF	amplitude-modulated radio frequency
AMSF	area maintenance and supply facility

AMSF	Army maintenance support facility
AMSF-E	Army maintenance support facility—Europe
AMSF-P	Army maintenance support facility—Pacific
AOAP	Army Oil Analysis Program
AOE	Army of Excellence
AOR	area of responsibility
APC	account processing code
APOD	aerial port of debarkation
AR	Army regulation
arfor	Army forces
armd	armored
armt	armament
arty	artillery
ASB	aviation support battalion
ASCC	Army service component command/commander
ASG	area support group
ASL	authorized stockage list
ASMC	area support maintenance company
ATC	air traffic control
ATE	automated test equipment
ATE	automatic test equipment
atmv	automotive
ATP	ammunition transfer point
ATST	area TMDE support team
AUEL	automated unit equipment list
aug	augmentation
autmv	automotive
auto	automotive
AUTODIN	automatic digital network
AUTOSEVOCOM	automatic secure voice
AVIM	aviation intermediate maintenance
avn	aviation
awr	Army war reserve
BCRI	battalion command readiness inspection

BCT	brigade combat team
BDA	battle damage assessment
BDAR	battlefield damage assessment and repair
bde	brigade
BDR	battle damage repair
BII	basic issue items
BITE	built-in test equipment
BMMC	brigade materiel management center
BMO	battalion maintenance officer
BMS	battalion maintenance sergeant
BMT	battalion maintenance technician
bn	battalion
BPA	blanket purchase agreement
BSA	brigade support area
BSL	bench stock list
BSTF	base shop test facility
btry	battery
C&C	collection and classification
C&E	communications and electronics
C&RS	calibration and repair support
CAAWS	combat anti-armor weapon system
CARC	chemical agent resistant coating
cav	cavalry
cbt	combat
CCA	circuit card assembly
CCI	controlled cryptographic items
CDA	Catalog Data Activity
cdr	commander
C-E	communications electronics
CECOM	Army Communications Electronics Command
CEWI	combat electronic warfare intelligence
CFR	Code of Federal Regulations
CG	commanding general
chem	chemical

CINC	Commander in Chief
CIP	command inspection program
cl	class
CMCC	corps movement control center
cmd	command
CMF	career management field
CMMC	corps materiel management center
CMT	company maintenance team
CMTC	company maintenance team chief
co	company
COE	center of excellence
coll & class	collection and classification
com elect	communications electronics
comm	communications
COMMEL	communications-electronics
COMMZ	communications zone
comp	component
COMSEC	communications security
con/cont	control
CONEX	container express
CONUS	continental United States
convl	conventional
COSCOM	corps support command
COTS	commercial off-the-shelf
CP	command post
CPP	camouflage pattern painting
CPU	central processing unit
CPX	command post exercise
crc	component repair company
CRT	combat repair team
crypto	cryptographic
CS	combat support
CSB	corps support battalion
CSG	corps support group

CSM	command sergeant major
CSS	combat service support
CW	chemical warfare
DA	Department of the Army
DAAS	Defense Automatic Addressing System
DASB	division aviation support battalion
DCR	document control register
DCSLOG	Deputy Chief of Staff, Logistics
def	defense
DIF	Defense Information Infrastructure
DIG	diagram
dig	digital
dig	diagnostics
DIO	Director of Industrial Operations
DISA	Defense Information Systems Agency
DISCOM	division support command
DISN	Defense Information Systems Network
div	division
DLA	Defense Logistic Agency
DMC	distribution management center
DMMC	division materiel management center
DMMO	division materiel management office
DMS	Defense Message System
DMWR	depot maintenance work requirements
DOD	Department of Defense
DODAAC	Department of Defense Activity Address Code
DOL	Director of Logistics
DPW	Directorate of Public Works
DRMO	Defense Reutilization and Marketing Office
DRSN	Defense Red Switch Network
DS	direct support
DS4	direct support standard supply system
DSA	division support area
DSB	division support battalion

DSCS	Defense Satellite Communications System
DSM	direct support maintenance
DSN	Defense Switched Network
DSS	direct support system
DSU	direct support unit
EAC	echelons above corps
EAD	echelons above division
ECAP	Environmental Compliance Achievement Program
ECG	equipment category code
ECOD	estimated cost of damage
ECU	environmental control unit
EDF	equipment data file
EEDS	electro-explosive devices
eg	for example
EIR	equipment improvement report
elect	electronic
ELMC	electronic maintenance company
EM	electronic media [product]
EMP	electromagnetic pulse
ENCOM	engineer command
engr	engineer
EOD	explosive ordnance disposal
EPA	Environmental Protective Agency
equip	equipment
ERC	equipment readiness code
EUSA	Eighth United States Army
evac	evacuation
EW	electronic warfare
F&E	fuel and electric
FA	field artillery
FAADS	forward area air defense systems
FEDLOG	Federal Logistics Catalogue
FEI	functionally emulative increment
FFCA	Federal Facilities Compliance Act

FGS	final governing standard
fin	finance
fld	field
FLOT	forward line of troops
FM	field manual
FMC	fully mission-capable
FMO	facilities management officer
FRA	forward repair activity
FRS	forward repair system
FSB	forward support battalion
FSC	forward support company
FTX	field training exercise
FUPP	full-up power pack
fwd	forward
FY	fiscal year
G4	assistant chief of staff for logistics (US Army division staff and higher)
gen	general; generation
GCSS-Army	Global Command Support System–Army
GMC	ground maintenance company
gnd	ground
GOCO	government-owned, contractor-operated
gp	group
GS	general support
GSE	ground support equipment
GSM	general support maintenance
GSMU	general support maintenance unit
GSSB	general supply support base
gsu	general supply unit
HAZCOM	hazardous communications
HAZMAT	hazardous material
HAZMIN	hazardous waste minimization
HERCULES	heavy equipment recovery combat utility lift and evacuation system
HET	heavy-equipment transporter

HHB	headquarters and headquarters battery
HHC	headquarters and headquarters company
HHD	headquarters and headquarters detachment
HHT	headquarters and headquarters troop
HM	hazardous material
HN	host nation
HNS	host nation support
HOW	howitzer
HQ	headquarters
HQDA	Headquarters, Department of the Army
HSB	heavy separate brigade
HSC	headquarters and supply company
hvy	heavy
HW	hazardous waste
IAW	in accordance with
ident	identical; identifiable; identification
ie	that is
IEW	intelligence and electronic warfare
IFF	identification friend or foe
ILAP	Integrated Logistics Analysis Program
ILS	integrated logistics support
IMM	integrated management module (GCSS Army)
IMO	installation maintenance officer
IMPE	information management and processing equipment
IMRF	instrument master record file
inf	infantry
inop	inoperative
insp	inspection
INTCOM	intercommunications
inv	inventory
IOSC	installation on-scene coordinator
IPD	issue priority designator
ISA	interservice support agreement
ISCP	Installation Spill Contingency Plan

ISM	integrated sustainment maintenance
iss	issue
ISSA	interservice support agreement
JFC	joint forces command/commander
K'R	contractor
kw	kilowatt
LCMS	land combat missile system
LCSM	local center for support maintenance
LD	light division
LID	light infantry division
LIF	logistics intelligence file
LIN	line item number
LM	light maintenance
LO	lubrication order
LOC	lines of communication
LOGCAP	Logistics Civil Augmentation Program
LOGSA	Logistics Support Activity
LP	listening post
LRU	line replacement unit
LSE	logistic support element
LSMM	local sustainment maintenance manager
lt	light
MAC	maintenance allocation chart
MACOM	major Army command
maint	maintenance
MAIT	maintenance assistance and instruction team
MARS	Military Affiliate Radio System
mat	materiel
MATO	materiel officer
MCC	movement control center
MCM	multicapable maintainer
MCO	maintenance control officer
MCP	maintenance collection point
MCS	maintenance control section/supervisor

MCSR	materiel condition status report
mech	mechanized
med	medical
MEDCOM	medical command
METT-TC	mission, enemy, terrain, troops, time available, and civilian considerations
MGT	management module (GCSS-Army)
MHE	materials-handling equipment
MI	military intelligence
MICOM	US Army Missile Command
MILSTAMP	military standard transportation and movement procedures
MILSTRIP	military standard requisitioning and issue procedures
MILVAN	military-owned demountable container
missl	missile
MLC	military load classifications
MLRS	multiple-launch rocket system
MMC	materiel management center
MMIP	Maintenance Management Improvement Program
MNT	maintenance module (GCSS-Army)
MOA	memorandum of agreement
MOPP	mission-oriented protective posture
mort	mortuary
MOS	military occupation specialty
MOUT	military operations on urban terrain
MP	military police
mph	miles per hour
MPL	mandatory parts list
MRC	maintenance recovery code
MRO	materiel release order
MRSA	materiel readiness support activity
MSB	main support battalion
MSDS	material safety data sheet
MSE	mobile subscriber equipment
MSG	master sergeant; manager

msl	missile
MSR	main supply route
MSS	military supply standard
MST	maintenance support team
MT	maintenance team
MTMC	Military Traffic Management Command
MTOE	modification table(s) of organization and equipment
MTP	mission training plan
mtr	motor
MTTR	mean-time-to-repair
MWO	modification work order
NATO	North Atlantic Treaty Organization
NBC	nuclear, biological, and chemical
NCO	noncommissioned officer
NCOIC	noncommissioned officer in charge
NDI	nondevelopment item
NETT	new equipment training team
NG	National Guard
NICP	national inventory control point
NIST	National Institute of Standards and Technology
NLT	not later than
NMC	not mission-capable
NMCS	not-mission-capable status
NNN	number of days
NSMM	national sustainment maintenance manager
NSN	national stock number
NSNFC^{3}I	nonstrategic nuclear forces command and control information
O&M	operation and maintenance
OCONUS	outside continental United States
OIC	officer in charge
OJT	on-the-job training
OMA	Operation and Maintenance, Army
OMG	operational maneuver group
OP	observation post

OPCON	operational control
OPORD	operations order
OPSEC	operations security
opt	optional
ord	ordnance
ORF	operational readiness float
OST	order ship time
PAC	personnel and administration center
pack	packing
pam	pamphlet
para	paragraph
pat	PATRIOT
PBO	property book officer
PBT	property book team
PCB	printed circuit board
PCN	product control number
PD	priority designator
PERSCOM	US Army Personnel Command
petrl	petroleum
petrol	petroleum
PGU	power-generation unit
P-level	primary level
PLL	prescribed load list
PLS	palletized load system
plt	platoon
PM	preventive maintenance
PMCS	preventive maintenance checks and services
POC	point of contact
POL	petroleum, oils and lubricants
POMCUS	prepositioned materiel configured to unit sets
POV	privately owned vehicle
PP&C	production, planning, and control
PPC&E	personnel protective clothing and equipment
PSA	project stock activities
PSG	platoon sergeant
PSYOP	psychological operations
pts	parts

pwr	power
QA	quality assurance
QC	quality control
QDR	quality deficiency report
QM	quartermaster
QSS	quick supply store
rad	radar
RADIAC	radiation, detection, indication, and computation
RAS	resource analysis system
RC	recovery code; Reserve Component
RCRA	Resource Conservation and Recovery Act
REC	radio electronic combat
rec	receiving
recon	reconnaissance
recov	recover; recovery
recvry	recovery
rep	repair
RF	radio frequency
ric	routing identifier code
RO	requisitioning objective
ROC	rear operations center
ROP	reorder point
ROPS	rollover protection safety
rpm	revolutions per minute
RPO	radiation/radiological protection officer
rpr	repair
RSMM	regional sustainment maintenance manager
RTOC	rear tactical operations center
RV	recovery vehicle
RX	reparable exchange
RXA	reparable exchange activity
S&S	supply and service
S1	Adjutant
S2	Intelligence Officer
S3	Operations and Training Officer

S4	Supply Officer
SAAS-Mod	Standard Army Ammunition System–Modified
SAFADS	small arms for air defense
SAMS	Standard Army Maintenance System
SAMS-I	Standard Army Maintenance System—Installation
SARSS	Standard Army Retail Supply System
SARSS-O	Standard Army Retail Supply System–Objective
SASO	stability and support operations
SCP	software change package
SDO	staff duty officer/NCO
SEALOC	sea lines of communication
sec	section
SED	special electronics device
seg	segregate
ship	shipping
SHORAD	short-range-air-defense
shpg	shipping
SIB	separate infantry brigade
sig	signal
SIGSEC	signal security
SINGCARS	Single-Channel and Ground Airborne Radio System
SJA	Staff Judge Advocate
SKO	sets, kits, and outfits
S-level	secondary reference level
SM	sustainment maintenance
smc	support maintenance company
SMM	sustainment maintenance manager
SN	serial number
SN	serial number
SOFA	status of forces agreement
SOI	signal operation instructions
SOO	support operations office(r)
SOP	standing operating procedure
SOS	support operations section

SOW	statement of work
SP	special purpose
sp	special
SPBS-R	Standard Property Book System–Redesigned
SPOD	sea port of debarkation
SPT	support
sqdn	squadron
SRA	special repair activity
SRC	standard requirement code
SRU	shop-replaceable units
SSA	supply support activity
SSL	shop stock list
SST	system support team
STACCS	Standard Theater Army Coordination and Control System
STAMIS	Standard Army Management Information System
STE-ICE	simplified test equipment interface control element
stk	stock
stor	storage
str	structure
sup	supply
svc	service
sys	system
TA	theater army
TAACOM	theater army area command
TAAMMC	theater army area materiel management center
TACCS	tactical army combat service
TACCS-E	tactical army combat service–enhanced
TACFIRE	tactical fire direction computer system
TAMC	theater army movement control activity
TAMMC	theater army material management center
TAMMS	The Army Maintenance Management System
TASC	training audiovisual support center
TAT	turnaround time
TB	technical bulletin
TC	training circular
TCOR	theater COMSEC office of record
TCS	Theater Communications System
TD	table of distribution
TDA	tables of distribution and allowances

tech	technical
temp	temporary
TF	task force
TI	technical inspection
TIMMS	TMDE integrated material management system
T-level	secondary transfer level
TM	technical manual
tm	team
TMDE	test, measurement, and diagnostic equipment
TMDE-GP	test, measurement, and diagnostic equipment, general purpose
TMDE-SP	test, measurement, and diagnostic equipment—special purpose
TMMC	theater materiel management center
TMP	transportation motor pool
TMT	transportation motor transport
TOC	tactical operations center
TOE	table(s) of organization and equipment
TOW	tube-launched, optically tracked, wire-guided
TQM	total quality management
TR	transportation request
tr veh	track vehicle
trans	transportation; transport
TRANSCOM	transportation command
trk	truck
TROC	Theater Record of COMSEC
trp	troop
TRS	theater reserve stocks
TSC	theater support command
TSC-A	Theater Signal Command—Army
TSMC	theater signal maintenance company
UIC	unit identification code
ULLS	unit-level logistics system
ULLS-A	Unit-Level Logistics System–Aviation
ULLS-G	unit-level logistics system—ground
ULLS-S4	Unit-Level Logistics System–S4 Module

UMCP	unit maintenance collection point
UN	United Nations
US	United States
USAISC	US Army Information Systems Command Support Computer System
USAMC	US Army Materiel Command
USAPAC	US Army, Pacific
USAPSL	US Army Primary Standards Laboratory
USAREUR	US Army, Europe
USATA	US Army TMDE Activity
USATSG	US Army TMDE Support Group
veh	vehicle
WARCO	warranty coordinator
wh veh	wheeled vehicle
whse	warehouse
WM	work measurement
WON	work order number
WSM	weapon system manager
WSRO	weapon system replacement operations
XO	executive officer

Bibliography

ALSM 18-L21. *SAMS-1 User Manual.*

AR 20-1. *Inspector General Activities and Procedures.* 15 March 1994.

AR 25-1. *The Army Information Resources Management Program.* 25 March 1997.

AR 40-5 *Preventive Medicine.* 15 October 1990.

AR 40-501. *Standards of Medical Fitness.* 30 August 1995.

AR 71-13. *The Department of the Army Equipment Authorization and Usage Program.* 3 June 1988.

AR 71-32. *Force Development and Documentation—Consolidated Policies.* 3 March 1997.

AR 190-11. *Physical Security of Arms, Ammunition and Explosives.* 30 September 1993.

AR 190-22. *Searches, Seizures and Disposition of Property.* 1 January 1983.

AR 190-51. *Security of Unclassified Army Property.* 30 September 1993.

AR 200-1. *Environmental Protection and Enhancement.* 21 February 1997.

AR 200-2. *Environmental Effects of Army Actions.* 23 December 1988.

AR 350-17. *Noncommissioned Officer Development Program.* 31 May 1991.

AR 360-81. *Command Information Program.* 20 October 1989.

AR 380-5. *Department of the Army Information Security Program.* 25 February 1988.

AR 380-19. *Information System Security.* 27 February 1998.

AR 380-40. (O)*Policy for Safeguarding and Controlling Communications Security (COMSEC) Material* (U). 1 September 1994.

AR 380-67. *The Department of the Army Personnel Security Program.* 9 September 1988.

AR 380-150. *Access to and Dissemination of Restricted Data.* 15 August 1982.

AR 381-100. (S)*Army Human Intelligence Collection Program* (U). 15 May 1988.

AR 385-10. *The Army Safety Program.* 23 May 1988.

AR 385-11. *Ionizing Radiation Protection (Licensing, Control, Transportation, Disposal, and Radiation Safety).* 1 May 1980.

AR 385-30. *Safety Color Code Markings and Signs.* 15 September 1983.

AR 385-40. *Accident Reporting and Records.* 1 November 1994.

AR 385-55. *Prevention of Motor Vehicle Accidents.* 12 March 1987.

AR 385-64. *US Army Explosives Safety Program.* 28 November 1997.

AR 420-49. *Utility Services*. 28 April 1997.

AR 420-70. *Buildings and Structures*. 10 October 1997.

AR 420-90. *Fire and Emergency Services*. 10 September 1997.

AR 530-1. *Operations Security (OPSEC)*. 3 March 1995.

AR 600-8-22. *Military Awards*. 25 February 1995.

AR 600-55. *The Army Driver and Operator Standardization Program*. 31 December 1993.

AR 672-20. *Incentive Awards*. 1 June 1993.

AR 700-4. *Logistics Assistance*. 30 June 1995.

AR 700-68. *Storage and Handling of Compressed Gases and Gas Liquids in Cylinders...* 2 September 1971.

AR 700-82. *Joint Regulation Governing the Use and Application of Uniform Source, Maintenance, and Recoverability Codes*. 22 June 1971.

AR 700-127. *Integrated Logistic Support*. 16 December 1986.

AR 700-132. *Joint Oil Analysis Program (JOAP)*. 5 December 1990.

AR 700-138. *Army Logistics Readiness and Sustainability*. 16 September 1997.

AR 700-139. *Army Warranty Program Concepts and Policies*. 10 March 1986.

AR 700-141. *Hazardous Material Information System (HMIS)*. 1 July 1997.

AR 702-7. *Product Quality Deficiency Report Program*. 20 July 1993.

AR 702-11. *Army Quality Program*. 15 April 1979.

AR 710-2. *Inventory Management Supply Policy Below the Wholesale Level*. 31 October 1997.

AR 710-3. *Asset and Transaction Reporting System*. 31 March 1998.

AR 725-50. *Requisition, Receipt, and Issue System*. 15 November 1995.

AR 735-5. *Policies and Procedures for Property Accountability*. 31 January 1998.

AR 750-1. *Army Materiel Maintenance Policy and Retail Maintenance Operations*. 1 August 1994.

AR 750-10. *Modification of Material and Issuing Safety-of-Use Messages and Commercial Vehicle Safety Recall Campaign Directive*. 1 December 1982.

AR 750-43. *Army Test, Measurement, and Diagnostic Equipment Program*. 28 November 1997.

CDA Pam 18-1. *Code Reference Guide for the ARMS Monthly AMDF*.

DA Form 285. *US Army Accident Report*. January 1992.

DA Form 285-AB-R. *US Army Abbreviated Ground Accident Report (AGAR)*. July 1994.

DA Form 348. *Equipment Operator's Qualification Record (Except Aircraft)*. 1 October 1964.

DA Form 1045. *Army Ideas for Excellence Program*. August 1990.

DA Form 1118. *Certificate of Merit for Safety*. July 1989.

DA Form 1119. *Certificate of Achievement in Safety*. July 1989.

DA Form 1687. *Notice of Delegation of Authority—Receipt for Supplies*. January 1982.

DA Form 2401. *Organizational Control Record for Equipment*. 1 April 1962.

DA Form 2404. *Equipment Inspection and Maintenance Worksheet*. 1 April 1979.

DA Form 2405. *Maintenance Request Register*. 1 April 1962.

DA Form 2406. *Miscellaneous Obligation Document*. October 1985.

DA Form 2407. *Maintenance Request*. July 1994.

DA Form 2408-4. *Weapon Record Data*. 1 January 1979.

DA Form 2408-9. *Equipment Control Record*. 1 October 1972.

DA Form 2408-14. *Uncorrected Fault Record*. June 1994.

DA Form 2408-20. *Oil Analysis Log*. October 1997.

DA Form 2765/2765-1. *Request for Issue or Turn-in*. April 1976.

DA Form 3254-R. *Oil Analysis Recommendation and Feedback (LRA)*. November 1980.

DA Form 3999-4. *Maintenance Work Request Envelope*. 1 April 1975.

DA Form 5823. *Equipment Identification Card*. September 1989.

DA Form 5983-1-E. *Operator's Qualification Record (EGA)*. March 1991.

DA Form 5984-E. *Operator's Permit Record (EGA)*. March 1991.

DA Form 5987-E. *Motor Equipment Dispatch (EGA)*. March 1991.

DA Form 5988-E. *Equipment Inspection Maintenance Worksheet (EGA)*. March 1991.

DA Form 5990-E. *Maintenance Request (EGA)*. March 1991.

DA Form 5992-E. *Equipment Usage Report (EGA)*. March 1991.

DA Pam 25-30. *Consolidated Index of Army Publications and Blank Forms*. 1 October 1997.

DA Pam 25-33. *User's Guide for Army Publications and Forms*. 15 September 1996.

DA Pam 40-501. *Hearing Conservation*. 27 August 1991.

DA Pam 351-20. *Army Correspondence Course Program Catalog*. 1 October 1997.

DA Pam 381-15. (S) *Foreign Military Intelligence Collection Activities Program*. 1 June 1988.

DA Pam 385-1. *Small Unit Safety Officer/NCO Guide*. 22 September 1993.

DA Pam 385-3. *Protective Clothing and Equipment*. 3 May 1976.

DA Pam 385-5. *Fundamentals of Safety in Army Morale Support Activities*. 15 November 1981.

DA Pam 385-40. *Investigation and Reporting*. 1 November 1994.

DA Pam 710-2-1. *Using Unit Supply System (Manual Procedures).* 31 December 1997.

DA Pam 710-2-2. *Supply Support Activity Supply System (Manual Procedures).* 1 March 1984.

DA Pam 738-750. *Functional Users Manual for The Army Maintenance Management System (TAMMS).* 1 August 1994.

DA Pam 750-1. *Leaders' Unit Level Maintenance Handbook*. 15 February 1994.

DA Pam 750-10. *US Army Equipment Index of Modification Work Orders*. 1 August 1989.

DA Pam 750-35. *Guide for Motor Pool Operations*. 1 August 1994.

DD Form 314. *Preventive Maintenance Schedule and Record*. 1 December 1953.

DD Form 1348-6. *DOD Single Line Item Requisition System Document (Manual Long-Form).* February 1985.

DD Form 1435. *COMSEC Maintenance Training and Experience Record*. April 1982.

DD Form 1577. *Unserviceable (Condemned) Tag*. October 1966.

DD Form 1970. *Motor Equipment Utilization Record*. April 1981.

DD Form 2026. *Oil Analysis Request*. 1 November 1977.

DOD 5500.7-R. *Standards of Conduct*. 30 August 1993.

EM 0007. (O)*FEDLOG* (S&I, Cdr, USAMC Logistics Support Activity, ATTN: AMXLS-ML, Bldg 3623, Redstone Arsenal, AL 35898-7466). 1 June 1998.

FM 3-3. *Chemical and Biological Contamination Avoidance*. 16 November 1992.

FM 3-4. *NBC Protection*. 29 May 1992.

FM 3-5. *NBC Decontamination*. 17 November 1993.

FM 3-100. *Chemical Operations Principles and Fundamentals*. 8 May 1996.

FM 5-103 *Survivability*. 10 June 1985.

FM 5-170. *Engineer Reconnaissance*. 5 May 1988.

FM 9-6. *Munitions Support in Theater of Operations*. 20 March 1998.

FM 9-38. *Conventional Ammunition Unit Operations*. 2 July 1993.

FM 9-43-2. *Recovery and Battlefield Damage Assessment and Repair*. 3 October 1995.

FM 9-207. *Operation and Maintenance of Ordnance Materiel in Cold Weather*. 20 March 1998.

FM 10-15. *Basis Doctrine Manual for Supply and Storage*. 12 December 1990.

FM 19-30. *Physical Security*. 1 March 1979.

FM 20-3. *Camouflage*. 14 November 1990.

FM 21-11. *First Aid for Soldiers*. 27 October 1988.

FM 21-60. *Visual Signals*. 30 September 1987.

FM 21-75. *Combat Skills of the Soldier*. 3 August 1984.

FM 21-76. *Survival*. 5 June 1992.

FM 21-305. *Manual for the Wheeled Vehicle Driver*. 27 August 1993.

FM 21-306. *Manual for the Track Combat Vehicle Driver*. 15 April 1983.

FM 24-16. *Communications-Electronics Operations, Orders, Records and Reports*. 7 April 1978.

FM 24-17. *Tactical Records Traffic System (TRTS)*. 17 September 1991.

FM 24-18. *Tactical Single-Channel Radio Communications Techniques*. 30 September 1987.

FM 24-33. *Communications Techniques: Electronic Counter-Countermeasures*. 17 July 1990.

FM 34-40. (S)*Electronic Warfare Operations* (U). 9 October 1987.

FM 34-60. *Counterintelligence*. 3 October 1995.

FM 38-725. *Direct Support System (DSS) and Air Line of Communications (ALOC) Management and Procedures*. 28 September 1990.

FM 55-15. *Transportation Reference Data*. 27 October 1997.

FM 55-30. *Army Motor Transport Units and Operations*. 27 June 1997.

FM 63-1. *Support Battalions and Squadrons, Separate Brigades and Armored Cavalry Regiment*. 30 September 1993.

FM 63-2. *Division Support Command, Armored, Infantry, and Mechanized Infantry Divisions*. 20 May 1991.

FM 63-4. *Combat Service Support Operations—Theater Army Area Command*. 24 September 1984.

FM 63-21. *Main Support Battalion*. 7 August 1990.

FM 90-3. *Desert Operations*. 24 August 1993.

FM 90-5(HTF). *Jungle Operations (How to Fight)*. 16 August 1982.

FM 90-6. *Mountain Operations*. 30 June 1980.

FM 90-10(HTF). *Military Operations on Urbanized Terrain (MOUT) (How to Fight)*. 15 August 1979.

FM 100-5. *Operations*. 14 June 1993.

FM 100-9. *Reconstitution*. 13 January 1992.

FM 100-10. *Combat Service Support*. 3 October 1995.

FM 100-14. *Risk Management*. 23 April 1998.

FM 100-15. *Corps Operations*. 29 October 1996.

FM 100-16. *Army Operational Support*. 31 May 1995.

FM 100-19. *Domestic Support Operations*. 1 July 1993.

FM 100-23. *Peace Operations*. 30 December 1994.

FM 101-10-1/1. *Staff Officers Field Manual—Organizational, Technical and Logistic Data (Volume 1)*. 7 October 1987.

OF Form 346. *US Government Motor Vehicle Operator's Identification Card*. November 1985.

SF Form 368. *Product Quality Deficiency Report*. October 1985.

TB 9-380-101-1 thru -26. (O)*Security Classification Guides for Weapon Systems*. Various dates.

TB 43-180. *Calibration and Repair Requirements for the Maintenance of Army Materiel*. 30 April 1996.

TB 43-0116. *Identification of Radioactive Items in the Army*. 1 April 1998.

TB 43-0142. *Safety Inspection and Testing of Lifting Devices*. 28 February 1997.

TB 43-0151. *Inspection and Test of Air and Other Gas Compressors*. 17 March 1989.

TB 43-0197. *Instructions for Safe Handling, Maintenance, Storage and Disposal of Radioactive Items Licensed by US Army Armament and Chemical Acquisition Logistics Activity*. 26 September 1997.

TB 43-0209. *Color, Marking, and Painting of Military Vehicles*... 31 October 1990.

TB 43-0211. *AOAP Army Oil Analysis Program Guide for Leaders and Users*. 5 February 1996.

TB 43-0239. *Maintenance in the Desert*. 15 October 1990.

TB 385-4. *Safety Requirements for Maintenance of Electrical and Electronic Equipment*. 1 August 1992.

TB 600-1. *Procedures for Selection, Training, Testing, and Qualifying Operators of Equipment/Systems*... 25 July 1977.

TB 600-2. *Procedures for Selection, Training, Testing, and Qualifying Operators of Construction Equipment, Materiel-Handling Equipment*... 28 June 1979.

TB 750-25. *Maintenance of Supplies and Equipment: Army Test, Measurement, and Diagnostic Equipment (TMDE) Calibration and Repair Support Program*. 1 March 1997.

TB MED 502. *Occupational and Environmental Health: Respiratory Protection Program*. 15 February 1982.

TB MED 506. *Occupational and Environmental Health: Occupational Vision*. 15 December 1981.

TB MED 523. *Control of Hazards to Health From Microwave and Radio Frequency Radiation and Ultrasound*. 15 July 1980.

TB MED 524. *Occupational and Environmental Health: Control of Hazards to Health From Laser Radiation*. 20 June 1985.

TC 5-400. *Unit Leaders' Handbook for Environmental Stewardship*. 29 September 1994.

TC 9-237. *Operator's Circular Welding Theory and Application*. 7 May 1993.

TC 24-20. *Tactical Wire and Cable Techniques*. 3 October 1988.

TC 43-4. *Commander's and Shop Officer's Guide for Support Maintenance Management*. 8 May 1996.

TC 43-35. *Recovery Training*. 3 October 1995.

Title 29, CFR, Part 1910.95, 1993 REV. *Occupational Safety and Health Administration. General Industry Standards*. 1993.

TM 5-315. *Fighting and Rescue Procedures in Theaters of Operation*. 20 April 1971.

TM 9-243. *Use and Care of Hand Tools and Measuring Tools*. 12 December 1983.

TM 9-1000-202-14. *Evaluation of Cannon Tubes*. 18 June 1993.

TM 9-1300-206. *Ammunition and Explosives Standards*. 30 August 1973.

TM 9-2350-200-BD-1. *Operator's, Unit, and Direct Support Maintenance for Tank, Combat, Full-Tracked, 105-mm Gun, M1....* 11 September 1991.

TM 9-2350-255-MAC. *Maintenance Allocation Chart for Tank, Combat, Full-Tracked: 105-MM Gun, Ml*. 11 October 1983.

TM 9-2610-200-14. *Operators, Unit, Direct Support, and General Support Maintenance Manual for Care, Maintenance Repair, and Inspection of Pneumatic Tires and Inner Tubes*. 21 November 1990.

TM 9-6140-200-14. *Operator's, Unit, Direct Support and General Support Maintenance Manual for Lead-Acid Storage Batteries...* 11 September 1998.

TM 38-410. *Storage and Handling of Hazardous M*aterials. 1998.

TM 38-L09-11. *Functional Users Manual for Maintenance Reporting and Management (MRM)*. 4 February 1985.

TM 38-L32-11 thru -15. *Functional Users Manuals for Direct Support Unit Standard Supply System (DS4)*. Various dates.

TM 743-200-1. *Storage and Materials Handling*. 15 January 1958.

UPDATE 10-3. *Physical Security* (Issue Number 3). 30 September 1993.

UPDATE 2-14. *Unit Supply* (Issue Number 14). 28 February 1994.

Index

A

accident, follow-up procedures, 8-3–4

ACCP. *See* Army Correspondence Course Program

ACL. *See* area calibration laboratory

AFRTS. *See* American Forces Radio and Television Service

air ambulance company, 2-68

administrative operations, 4-52

air defense, 4-55

air defense artillery (ADA), 2-25, 2-26, 2-27, 2-34, 2-35, 2-36

air line of communication, 3-41

airborne equipment support company, 2-61

aircraft

transport, fixed wing, 3-42

US Air Force, 3-43

American Forces Radio and Television Service, 2-3

ammunition, 6-6, 6-9, 8-6

ammunition group (conventional), 2-11

AMSF. *See* area maintenance and supply facility

AN/GSM-286 support team, 7-8

AN/GSM-287 support team, 7-8

animal, pack, 3-41, 3-42

AOAP. *See* Army Oil Analysis Program

area calibration laboratory, 2-8, 2-9, 2-10, 7-5, 7-6, 7-7, 7-8

area calibration laboratory team, 2-8, 2-9, 2-10

area defense, 3-6, 3-7, 3-8

area maintenance and supply facility (AMSF), 2-3, 2-2-4, 2-5, 2-3–5, 3-22, 3-23

area support, 1-16

area support group (ASG), 2-11, 2-15, 2-19, 2-21, 2-23, 2-24, 2-25, 2-27, 2-90, 3-19, 3-20, 3-21

area support maintenance company (ASMC), 2-47

area TMDE support team, 2-9, 2-10, 7-2, 7-6, 7-8

armament, 2-23

armored cavalry regiment (ACR), 2-31, 2-32, 2-34, 2-76, 2-78, 2-79

maintenance troop, 2-78–79

support squadron, 2-76–78

Army Correspondence Course Program, environmental awareness subcourses, 8-26

Army maintenance and supply facility

Europe, 2-4

Pacific, 2-4

Army master data file (AMDF), 4-18, 4-29

Army Materiel Command (USAMC), 2-1, 2-13, 2-14, 3-24, 4-40, 5-2, 7-2

Army Materiel Status System (AMSS), 4-18, 4-20, 4-22, 4-23

Army of Excellence, 2-41

Army Oil Analysis Program (AOAP), 1-7, 2-14

Army Safety Program, 8-3

Army service component command (ASCC), 2-1, 2-14, 3-21, 3-22, 4-2, 5-3, 5-12, 5-14, 6-10, 6-12

major commands in, 2-1

Army war reserve (AWR) stocks, 2-25

artillery, 4-31, 4-33, 4-54, 4-55

ASCC. *See* Army service component command

ASG. *See* area support group

assault helicopter company, 2-65, 2-67, 2-74

assemblies, contaminated, 3-15

assessment and regeneration, 3-10

asset balance file (ABF), 4-2

ATST. *See* area TMDE support team

attack, 3-1, 3-2, 3-4, 3-11, 3-42, 3-44, 4-54, 8-14, 8-15

guerrilla, 4-51, 4-54

insurgent, 4-51

authorized stockage list (ASL), 2-18, 2-25, 2-27, 2-33, 2-36, 2-41, 2-45, 2-49, 2-53, 2-57, 2-67, 2-74, 2-78, 2-81, 3-5, 3-43, 4-49, 4-53, 5-2, 5-4, 5-7, 5-9, 5-10

automated data processing (ADP), 2-6, 2-20, 2-49, 2-58, 2-60, 2-64, 2-71, 2-72

automated materiel management, 2-65, 2-67, 2-74

automatic chemical alarm, 6-6

automation, 4-14, 4-24, 4-39, 5-11

aviation brigade, 2-39, 2-43, 2-52, 2-53

aviation intermediate-level maintenance (AVIM), 2-39, 2-55

aviation maintenance company (AMCO), 2-55

aviation support battalion (ASB), 2-39, 2-40, 2-41, 2-52, 2-53

heavy division, ground maintenance company, 2-53–54

B

base shop test facility (BSTF) augmentation team, 2-46

basic issue item (BII), 5-10

basis of allocation, 2-4, 2-6, 2-19, 2-21, 2-23, 2-26, 2-27, 2-

33, 2-35, 2-36, 2-39, 2-42, 2-43, 2-45, 2-48, 2-50, 2-52, 2-53, 2-55, 2-57, 2-58, 2-60, 2-63, 2-65, 2-67, 2-70, 2-72, 2-74, 2-76, 2-79, 2-80, 2-81
battalion
aircraft maintenance (AVIM), 2-68
aviation maintenance (AVIM), 2-11
corps support (CSG)
maintenance company (DS) Patriot, 2-36–37
nondivisional maintenance company (DS), 2-32–34
ordnance missile support company (DS), 2-34–35
DS/GS maintenance (ASG), 2-17
explosive ordnance disposal (EOD), 2-11
forward support (FSB), 2-39, 2-40, 2-41, 2-42, 2-43, 2-47, 2-48, 2-49, 2-50, 2-56, 2-59, 2-60, 2-61, 2-62, 2-63, 2-64, 2-66, 2-67, 2-69, 2-70, 2-71, 2-72, 2-73, 2-74, 2-75, 2-84, 2-85, 2-87, 2-102, 2-103, 2-105, 3-43, 5-13
heavy division, 2-47–49
main support (heavy division)
electronic maintenance company, 2-44–46
maintenance, 2-15
maintenance (area support group) (ASG), 2-17, 2-20, 2-22
maintenance company (DS), Patriot, 2-27
ordnance missile support company (GS), 2-25–26
personnel, 2-11
petroleum, 2-11
petroleum supply, 2-15, 2-30
supply and service, 2-15, 2-30
transportation, 2-29
battalion, armored/mechanized infantry, 2-83
battalion, aviation support (heavy division), 2-51–52
battalion, combat, organization of, 2-83
headquarters and headquarters company (HHC), 2-85, 2-84–85
battalion, main support
air assault division, 2-69–70
heavy maintenance company, 2-70–71
airborne division, 2-62–63
battalion headquarters, 3-19–20
battalion maintenance officer (BMO), 2-85, 2-86, 2-87, 2-95, 2-102, 2-103, 2-104, 2-105, 3-2, 3-5, 6-1, 6-2, 6-3, 6-4, 6-5, 6-8
battalion maintenance sergeant (BMS), 2-86, 2-102, 2-103
battalion maintenance technician (BMT), 2-86, 2-87, 2-102, 2-103, 2-104, 6-8
battalion task force, organization of, 2-92–94
battery, 3-34, 3-40
battle damage assessment (BDA), 3-7, 3-10, 3-12, 6-14
battle damage assessment and repair (BDAR), 1-18, 2-14, 2-87, 2-88, 2-102, 2-104, 3-2, 3-3, 3-5, 3-6, 3-8, 3-9, 3-26, 3-27, 6-3, 6-14–15
training, 6-14
battlefield, 2-1, 2-13, 2-86, 2-87, 2-102, 3-1, 3-2, 3-11, 3-15, 3-19, 3-43, 4-8, 4-17, 4-32, 5-12, 6-8, 6-14, 8-14
maintenance, management of, 1-17
bay shop, 4-29, 4-31
BDAR. *See* battle damage assessment and repair.
bench stock, 4-47
bench stock list (BSL), 4-15
black market, 4-54
brigade, maneuver, 2-60, 2-66, 2-67, 2-73, 2-74
brigade materiel management center (BMMC), 2-81
brigade support area (BSA). *See also* division support area and brigade support area. 2-39, 2-47, 2-49, 2-50, 2-59, 2-67, 2-74, 2-90, 3-2, 5-13
buildings, 3-11, 3-39, 3-40, 4-31

C

cannibalization, 2-23, 2-104, 3-6, 3-8, 3-9, 5-12, 5-13, 5-14, 5-12–14, 5-15
battle support procedures, 5-12, 5-13
on the battlefield, 5-12
peacetime policy, 5-14
point, CONUS, 5-14
unauthorized, 5-14
wartime policy, 5-14
calibration and repair support, 2-7, 2-8, 2-9, 2-10, 2-11, 7-1, 7-4, 7-5, 7-7, 7-8
P-level, 7-2
S-level, 2-8, 2-10, 7-5, 7-8
T-level, 2-11, 7-8
TMDE, 7-1
calibration and repair support (C&RS) program, TMDE, 7-1
divisional, 7-5
objectives, 7-1
canvas, 2-20, 2-43
carbon monoxide poisoning, 3-40
C&RS. *See* calibration and repair support
Centers of Excellence (COE), 1-8, 4-5, 4-29, 4-30, 4-31, 4-29–31
lines, realignment of, 4-30–31
repair quotas for, 4-30
reparable candidates for, 4-29
Class I supply, 6-4, 6-12, 7-6, 7-7

Class II supply, 5-5, 5-6, 5-7, 6-4
Class III supply, 2-41, 2-47, 6-4
Class V supply, 6-4
Class VII supply, 4-2, 5-10
Class IX supply, 2-6, 2-9, 2-18, 2-20, 2-25, 2-27, 2-33, 2-34, 2-36, 2-44, 2-45, 2-53, 2-65, 2-67, 2-74, 2-79, 3-21, 3-32, 3-33, 3-38, 4-2, 4-17, 4-18, 4-40, 5-5, 5-6, 5-7, 6-4, 6-12, 7-6, 7-7
centralized materiel management of, 2-43, 2-45, 2-79
on-line catalog, 4-18
support, 5-1, 7-6
effect of cold weather on, 3-38, 5-1, 7-6
classification. *See* collection and classification
classified material, 8-15–16
classification guidance for, 8-15–16
clean area support strategy, 3-16
Clean Water Act, 8-24
CMT. *See* company maintenance team
cold injury, 3-40
cold weather operations, 3-37–41
maintenance during, 3-39
collection, DS maintenance units, 6-8–9
collection and classification (C&C), 4-10, 5-12, 6-1, 6-5, 6-8–9, 6-12
collection and classification (C&C) company, maintenance battalion (area support group), 2-22–25
collection and classification (C&C) service companies, 4-10, 6-9
combat, 3-1, 3-2, 3-3, 3-5, 3-7, 3-8, 3-9, 3-10, 3-12, 3-16, 3-41, 3-42, 3-43, 4-2, 4-3, 4-4, 4-49, 4-54, 5-3, 5-9, 5-10, 5-12, 5-14, 5-15, 6-2, 6-8, 6-12, 6-14, 6-15, 7-6, 8-1, 8-9, 8-12
combat developers, 4-4
combat electronic warfare intelligence (CEWI), 2-44
combat health support, 2-9, 7-7
combat repair team, 1-15
combat service support (CSS), 2-1, 2-8, 2-15, 2-17, 2-29, 2-31, 2-39, 2-47, 2-48, 2-55, 2-83, 2-84, 2-91, 2-92, 2-95, 2-96, 2-97, 2-98, 2-101, 2-102, 2-103, 3-3, 3-5, 3-19, 3-22, 3-28, 4-5, 4-52, 5-2, 5-3, 6-1, 7-6
combat support (CS), 2-29, 2-39, 2-84, 2-91, 2-92, 2-98, 3-21, 5-3, 6-1
combat trains, 2-85, 2-86, 2-95, 2-101, 2-103, 3-2, 3-43, 6-8
combat zone, 2-1
command and control. *See also* command, control, and communications. 2-1, 2-3, 2-4, 2-9, 2-34, 2-84, 2-86, 2-91, 2-100, 7-2, 7-7, 8-14
command, control, and communications, 3-2, 3-3, 3-8
command sergeant major, 2-84, 2-101
communications, 3-1, 3-2, 3-3, 3-4, 3-7, 3-8, 3-21, 3-32, 4-34, 4-51, 4-52, 4-56, 6-8, 8-4, 8-16, 8-21
communications security (COMSEC), 2-6, 2-21, 2-49, 2-64, 2-71, 2-72, 2-78, 2-80, 4-51
communications zone (COMMZ), 1-18, 2-13
COMMZ. *See* communications zone
company, mechanized infantry, 2-85
company, tank, 2-85
company maintenance team (CMT), 1-18, 2-85, 2-87, 2-88, 2-95, 2-103, 2-104, 3-6, 3-9, 6-2, 6-3, 6-4, 6-5, 6-8, 6-14
component repair companies, 2-38
COMSEC. *See* communications security
contamination
avoidance of, 3-18
biological, 3-16
radiological, 3-15
contractor, civilian, 2-4, 2-14, 2-15, 3-22
controlled exchange, 5-14–15
convoy, 3-27
corps. *See also* corp area. 2-1, 2-3, 2-9, 2-18, 2-19, 2-25, 2-26, 2-29, 2-30, 2-31, 2-32, 2-33, 2-34, 2-35, 2-36, 2-39, 2-43, 2-45, 2-53, 2-58, 2-60, 2-63, 2-65, 2-67, 2-70, 2-72, 2-74, 2-76, 2-78, 2-81, 2-90, 2-91, 2-92, 3-18, 3-32, 4-3, 4-5, 4-14, 4-16, 4-40, 4-52, 5-4, 5-10, 5-12, 6-1, 7-1, 7-6, 7-7
corps area
communications system, 4-52
logistics task force, 2-91–92
corps materiel management center (CMMC), 4-2, 5-3
corps rear area, 2-31, 2-91, 2-92
corps support area, 2-29–37
corps support battalion (CSB), 2-30, 2-31, 2-32, 2-33, 2-34, 2-35, 2-36, 2-37
corps support command (COSCOM), 2-9, 2-29, 2-30, 2-31, 2-35, 2-39, 3-19, 4-16, 5-3, 5-4, 5-9, 5-10, 7-6, 7-7
corps support group, 2-30, 2-31, 2-32, 2-33, 2-34, 2-35, 2-36, 2-37, 2-91, 2-92, 3-19, 3-20, 3-21
forward, 2-31–32
rear, 2-30
organization, 2-29
COSCOM. *See* corps support command

COTS. *See* equipment, commercial off-the-shelf
covering force support area/operations, 2-76–82, 3-7
cryptographic items, 2-6, 2-21, 2-22, 2-23, 6-9
CSB. *See* corps support battalion
CSG. *See* corps support command, corps support group
CSS. *See* combat service support

D

decentralized operations, 1-19
  centralized management of, 1-19
decontamination, 3-17
defense, 4-54, 8-14, 8-17
Defense Automatic Addressing System (DAAS), 5-11
Defense Information Infrastructure (DII), 3-21, 3-22, 3-23
Defense Information Systems Agency (DISA), 3-21
Defense Satellite Communications System, 2-3, 2-4
deployment, 2-99–100, 4-53–54
depot repair, 6-12
Deputy Chief of Staff for Logistics, 7-2
desert environment, 4-49
desert operations, 3-32–37
Desert Shield, 2-98
dining facility, unit, 4-51, 4-52
direct support (DS) maintenance
  defensive operations, 3-2–6, 3-7–8
  unit,
    internal management of, 4-52–56
direct support system (DSS), 4-48
dirt, 3-12, 3-35, 3-36, 5-8
disaster relief operations, 3-28, 3-30, 3-31
DISCOM. *See* division support command
distribution management center, 2-41
division, light infantry, 2-55, 2-60
division airborne support battalion, 2-41, 2-54
division cavalry squadron, 2-39, 2-51
division materiel management center (DMMC), 2-43, 2-45, 2-47, 2-48, 5-3, 5-4, 5-10
division rear area, 2-39, 2-41, 2-52, 2-56, 2-57, 2-62, 2-69, 2-91
division support area (DSA). *See also* division support area and brigade support area. 2-39, 2-41, 2-56, 2-62, 2-63, 2-64, 2-67, 2-69, 2-70, 2-71, 2-74, 3-3, 5-13
division support area and brigade support area, 2-39–75
division support battalion, 2-41, 2-47
division support command (DISCOM), 2-39, 2-40, 2-42, 2-47, 2-48, 2-51, 2-55, 2-56, 2-61, 2-62, 2-66, 2-68, 2-69, 2-73, 3-3, 4-16, 6-1
  air assault division, 2-68–69
  airborne division, 2-61
  heavy division, 2-39
  light division, 2-55–56, 2-57, 2-61
    main support battalion, 2-56
Division XXI Forward Support Company, 1-15
DMMC. *See* division materiel management center
Document Control Register, 4-18, 4-19
Dragon manportable medium antitank assault weapon, 2-45, 2-50, 2-57, 2-60
DS. *See* maintenance system, Army, levels, direct support
DSCS. *See* Defense Satellite Communications System
dust, 3-35, 4-53

E

early warning devices, 4-55, 8-14
ECAP. *See* Environmental Compliance Achievement Program
echelons above corps (EAC) area, 2-3, 2-13, 2-25, 2-26, 2-1–28, 2-90, 2-91, 2-98, 3-12, 3-14, 4-16
  logistics task force, 2-90–91
electrical/electronic components, 8-7
electronic devices, 2-18, 2-20, 2-23, 2-33, 2-60, 2-78, 2-80
electronic maintenance company, 2-42, 2-50
embedded training, 4-18
emergency evacuation plan, 8-6
emergency maintenance service, 3-26–27
enemy
  ground action, 4-51
  threat, countering of, 4-55–56
engineer command, (ENCOM), 2-1
environment
  Army policy on, 8-17–18
  impact of peacekeeping operations on, 3-28
  key laws and regulations, 4-52, 8-18–19
  state regulations, 8-18
  unit program, assessment of, 8-26–27
environment, adverse, 3-32–44
environment, hostile, 3-28

environmental awareness, unit training program, 8-25–26
Environmental Compliance Achievement Program (ECAP), 8-19–20
environmental management, 8-17–27
environmental programs, unit-level, 8-20–21
Environmental Protection Agency (EPA) , 8-18, 8-19, 8-26
Federal Facility Compliance Strategy, 8-26
EOD. *See* explosive ordnance disposal
equipment, 1-1, 1-2, 1-3, 1-6, 1-7, 1-9, 1-11, 1-12, 1-13, 1-16, 1-18, 1-19, 2-4, 2-5, 2-6, 2-8, 2-10, 2-13, 2-14, 2-17, 2-18, 2-19, 2-20, 2-21, 2-22, 2-23, 2-24, 2-25, 2-27, 2-32, 2-33, 2-36, 2-39, 2-43, 2-44, 2-45, 2-49, 2-50, 2-51, 2-53, 2-54, 2-55, 2-57, 2-58, 2-60, 2-61, 2-62, 2-63, 2-64, 2-65, 2-67, 2-70, 2-71, 2-72, 2-74, 2-78, 2-80, 2-81, 2-83, 2-85, 2-87, 2-92, 2-95, 2-99, 2-100, 2-102, 2-104, 3-1, 3-2, 3-3, 3-4, 3-5, 3-6, 3-7, 3-8, 3-9, 3-10, 3-11, 3-12, 3-13, 3-14, 3-15, 3-16, 3-17, 3-18, 3-19, 3-20, 3-22, 3-23, 3-24, 3-25, 3-26, 3-28, 3-29, 3-31, 3-32, 3-33, 3-34, 3-35, 3-36, 3-37, 3-39, 3-40, 3-41, 3-42, 3-43, 3-44, 4-1, 4-2, 4-3, 4-4, 4-5, 4-6, 4-7, 4-10, 4-11, 4-12, 4-13, 4-16, 4-18, 4-21, 4-22, 4-26, 4-31, 4-32, 4-33, 4-34, 4-35, 4-38, 4-39, 4-40, 4-45, 4-46, 4-47, 4-48, 4-49, 4-52, 4-53, 4-54, 4-55, 4-56, 5-1, 5-9, 5-10, 5-11, 5-12, 5-13, 5-14, 6-1, 6-2, 6-3, 6-4, 6-5, 6-6, 6-7, 6-8, 6-9, 6-10, 6-12, 6-14, 7-1, 7-6, 7-7, 7-8, 8-2, 8-3, 8-4, 8-6, 8-7, 8-8, 8-9, 8-11, 8-13, 8-14, 8-16, 8-24, 8-25
abandoned, recovery of. *See* recovery, of abandoned equipment
air traffic control, 2-4
aircraft armament, 2-49
airdrop, 2-17, 2-22, 2-23, 3-32
artillery, 2-20, 2-43, 2-57, 2-60, 2-78, 2-80
audiovisual, 2-21
automated communications systems, 2-4
automotive, 2-18, 2-20, 2-32, 2-43, 2-78, 2-81
aviation-peculiar ground support, 2-51
avionics, 2-17, 2-49, 2-51
commercial off-the-shelf (COTS), 2-4, 3-21, 3-22, 7-1
communications-electronics (C-E), 2-18, 2-19, 2-20, 2-32, 2-44, 2-65, 3-20, 3-22, 4-32, 4-33
computer, 2-18, 2-33, 2-43
construction, 4-31
contaminated, 3-11, 6-7
hazards of, 3-12
effects of desert environment on, 3-33–36
electronic switching systems, 2-4
electronic warfare/intercept, 2-21
engineer, 2-43, 2-57
evacuation of, 4-1, 4-25, 4-39, 6-5, 6-10
high-pressure, 8-7
identification friend or foe (IFF), 2-27, 2-36
information management and processing, 2-4
information systems, 2-3, 2-4, 3-21, 3-22, 3-23, 4-9, 4-14
lighting, 3-40
marking of, 3-13
mechanical, 8-9
medical, 2-49
NBC defense, 2-85
power generation, 2-18, 2-20, 2-23, 2-33, 2-57, 2-60
quartermaster and chemical, 2-18, 2-20, 2-23, 2-33, 2-78, 2-80
recovery, 6-2–3
refrigeration, 2-20
signal transmission systems, 2-4
table(s) of organization and (TOE), 2-21, 2-24, 2-44, 2-45, 2-50, 2-53, 2-54, 2-58, 2-60, 2-61, 2-64, 2-65, 2-67, 2-71, 2-74, 5-1
target acquisition/
surveillance, 2-22
telephone central office, 2-18, 2-33
utilities, 2-20, 2-23, 2-43, 2-78, 2-80
equipment operator qualification program, 8-4
equipment readiness, 4-3
evacuation, 1-16, 2-19, 2-23, 2-33, 2-49, 2-58, 2-60, 2-68, 3-4, 3-5, 3-8, 3-10, 3-12, 3-20, 3-21, 3-26, 4-9, 4-10, 4-25, 4-32, 4-33, 4-36, 4-39, 4-38–39, 4-40, 4-49, 4-55, 5-13, 6-1, 6-2, 6-5, 6-7, 6-8, 6-10–11, 8-6
management of, 4-10
executive officer, 2-84, 2-85, 2-101, 2-102, 2-103, 3-2, 5-10
exploitation and pursuit, 3-2
explosive ordnance disposal (EOD), 2-11, 6-6, 6-7, 8-8
explosives, 6-6, 6-9

F

fabric, 2-18, 2-33
fabrication, 5-14
Federal Facilities Compliance Act (FFCA), 8-18
field services, 2-29, 2-31, 2-48, 2-53, 2-76, 2-79, 2-90, 2-102
field site selection and layout. *See* site selection and layout
field trains, 2-84, 2-85, 2-86, 2-87, 2-103, 3-2

fire control instruments/equpment, 2-20, 2-23, 2-43, 2-57, 2-60
fire control systems, 2-20, 2-23
fire plan, 8-6
fire prevention program, 8-4
flexibility, organizational, 1-18
food, 2-9, 2-20, 2-43, 2-45, 2-49, 2-53, 2-60, 2-63, 2-65, 2-70, 2-72, 2-74, 2-79, 2-81, 7-7
force developer, 2-96
force projection, 1-1, 1-13
Force XXI, 1-5, 1-14, 1-15, 1-20, 2-7, 2-13, 2-25, 2-38, 2-41, 2-47, 2-54, 2-89
forward maintenance collection point, 3-7
forward modules, 2-99
forward support, 1-16
forward support battalion (FSB)
air assault division, 2-73, 2-74
maintenance company, 2-74–75
airborne division, 2-66, 2-67
maintenance company, 2-67–68
Force XXI division, 2-51
light division, 2-59, 2-60
maintenance company, 2-60–61
heavy division
maintenance company, 2-49–50
friendly forces, 6-1, 6-9
fuel and electric/electrical components/systems, 2-18, 2-23, 4-32
full-up power pack (FUPP), 1-14
functional modules, 2-99
functionally emulative increment, 2-97, 2-98

G

general support maintenance unit (GSMU), 4-4, 4-15, 5-2, 5-13
generator, 4-33
Global Command Support System–Army (GCSS-Army), 1-20
ground maintenance company (GMC), 2-52
group, finance, 2-29
group, personnel, 2-29
guerrilla forces, 4-54

H

hazardous communications (HAZCOM) program, 8-4, 8-5, 8-10, 8-23
hazardous materials (HAZMAT) program, 8-21–22
hazardous waste (HW), 8-19, 8-20, 8-21, 8-22, 8-23, 8-25, 8-26
handling and disposal of, 8-22
inventory control, 8-23
transportation requirements for, 8-22
hazards, recovery. *See* recovery, hazards of
HAZCOM. *See* hazardous communications (HAZCOM) program
headquarters and headquarters detachment (HHD), 2-6, 2-21, 2-23, 2-26, 2-35, 2-42, 2-43
headquarters and headquarters troop, 2-76
headquarters and supply company, 2-52, 2-53, 2-56, 2-59, 2-60, 2-62, 2-63, 2-65, 2-66, 2-69, 2-70, 2-72, 2-73, 2-74
headquarters section, 2-86
hearing conservation, 8-5
heat, 3-11, 3-12, 3-14, 3-34, 3-35, 3-36, 3-38, 3-40, 3-41
heavy maintenance company, 2-62, 2-69
helicopter, cargo, 3-42
host nation
environmental laws, 8-19
support, 2-13, 2-14, 3-22, 3-28, 3-29, 3-31, 8-17, 8-18, 8-19
lack of, 3-29
human portage, 3-41
humanitarian operations, 3-30–31

I

identification friend or foe (IFF), 2-27
IMPE. *See* information management and processing
infantry, 3-42, 4-54
mechanized, 3-42
Information security, 8-15
infrared, 7-1, 8-2
inspection schedule, stored stock, 5-8
inspection section, 4-35, 4-37
inspection team, 3-17
inspections and visits, 4-44
inspector, quality control, 4-35, 4-37, 4-47
installation on-scene coordinator (IOSC), 8-24
Installation Spill Contingency Plan (ISCP), 8-24
instrument master record file (IMRF), 2-9, 7-7
instruments, survey, 2-23
integrated logistics support (ILS), 4-4
integrated sustainment maintenance (ISM), 4-2
intelligence, 2-23, 2-102, 3-29, 4-55, 4-56, 5-11, 6-1, 6-5, 8-16
intrashop work orders, 4-38

J

job/bench shop, 4-32
jungle operations, 3-41–42

L

land combat missile system (LCMS), 2-25, 2-26, 2-34, 2-35, 2-44, 2-45
laws, local environmental, 8-18

layout. *See* site selection and layout
leadership, 4-11–12
leather, 4-32
liaison visits, 3-24–25
library, technical publications, 2-10, 7-7
life support, 2-98, 2-99
lifting devices, 8-7
light discipline. *See* noise and light discipline
light division, 2-59, 3-37
light maintenance company, 2-62, 2-63, 2-69
line-replaceable unit, 1-14, 5-1
listening/observation post, 4-55
local purchase, 5-15
local sustainment maintenance manager (LSMM), 1-8, 4-5, 4-30, 4-31
LOGCAP. *See* Logistics Civil Augmentation Program
logistical package operations, 2-103
logistical support, 2-9, 7-7
logistician, 6-5, 6-10
Logistics Assistance Program, 2-14
Logistics Civil Augmentation Program (LOGCAP), 2-14, 2-15
  teams, 2-15
logistics intelligence file (LIF), 5-10–11
Logistics Support Activity (LOGSA), 4-23
logistics support element (LSE), 1-8, 2-13, 2-14, 2-13–15, 4-4, 4-5, 4-6, 7-2, 7-7
low-intensity operations, 4-51

M

MAC. *See* maintenance allocation chart
Macedonia, 2-98
machine, office, 2-21, 2-78, 2-80
machining, 2-18, 2-20, 2-33
main maintenance company, 2-42
main supply route (MSR), 3-26, 4-53, 6-4
main support battalion (MSB), 2-9, 2-39, 2-40, 2-41, 2-42, 2-43, 2-44, 2-45, 2-46, 2-47, 2-48, 2-50, 2-53, 2-55, 2-56, 2-57, 2-58, 2-60, 2-61, 2-62, 2-63, 2-64, 2-65, 2-68, 2-69, 2-70, 2-71, 2-72, 3-43, 5-13, 7-5, 7-6
  air assault division, light maintenance company, 2-71–72
  airborne division
    heavy maintenance company, 2-63–64
    light maintenance company, 2-64–65
  light division, maintenance company, 2-57–58
maintenance administrative section, 2-86
maintenance allocation chart (MAC), 1-2, 1-6, 1-9, 4-1, 4-33
maintenance area, selecting of, 4-53
maintenance battalion, DS, 3-19
maintenance company, DS, maintenance battalion (area support group), 2-18–19
maintenance company, GS, maintenance battalion (area support group), 2-20–22
maintenance company, nondivisional (DS), 3-20–21
maintenance company layout, sample of, 4-49, 4-50
maintenance control, 4-24–50
  coordination steps, 4-25
  overloads, 4-25
    avoiding of, 4-25–26
maintenance control clerk, 4-39, 4-45, 4-46
maintenance control officer, 1-15, 2-103, 2-104, 2-105, 3-25, 4-26, 4-34, 4-39, 4-44, 4-45, 4-48, 5-13, 8-4
maintenance control section (shop office), 4-12, 4-24, 4-25, 4-34, 4-35, 4-36, 4-38, 4-39, 4-49, 8-13
maintenance control supervisor, 4-39, 4-45
maintenance hazards, 8-2
maintenance management
  above DS maintenance company, 2-92
  information systems, 4-14–23
  levels of, 4-9–13
  process and resources, 4-1–8, 4-1–8
  tools and techniques, 4-39–44
Maintenance Management UPDATE, 4-2
maintenance manager, 1-1, 1-8, 1-17, 1-19, 4-3, 4-4, 4-5, 4-6, 4-7, 4-8, 4-14, 4-17, 4-39
  management skills of, 4-7–8
  responsibilities of, 1-19
maintenance managers, readiness and sustainment, 4-3–6
maintenance mechanic, 6-14
maintenance module (GCSS-Army), 1-20
maintenance operations, 1-1, 1-2 1-4, 1-5, 1-6, 1-19, 3-1, 3-2, 3-8, 3-10, 3-24, 3-28, 3-30, 3-32, 3-39, 3-40, 4-1, 4-2, 4-7, 4-8, 4-9, 4-10, 4-17, 4-39, 4-47, 4-52, 5-1, 5-5, 5-9, 5-12, 6-6, 6-8, 8-1, 8-3, 8-5, 8-6, 8-14
  command emphasis on, 4-7
  synchronized, 1-1, 2-102, 2-103, 2-104
maintenance platoon, 2-85–86, 3-2, 4-34, 4-49, 6-4
maintenance recovery code (MRC), 4-1
maintenance requirements, estimating of, 4-12
maintenance safety, 8-2

maintenance service section (MSS), 2-85, 2-87, 2-104, 6-8
maintenance support
desert, 3-36–37
expedient methods, 3-5
principles of, 4-1
maintenance support team (MST), 1-7, 1-18, 2-25, 2-81, 2-85, 2-86, 2-87, 2-95, 2-98, 2-102, 2-103, 2-104, 2-105, 3-7, 3-14, 3-24, 3-25, 3-26, 3-37, 4-48, 6-2, 6-8
maintenance system, Army, 1-1, 1-2, 1-12
field maintenance, 1-5
functions, 1-12
levels of
consolidation of into two levels, 1-5
depot, 5-2, 6-9, 6-12
description, 1-3–4
direct support, 2-7, 2-17, 2-18, 2-19, 2-25, 2-26, 2-27, 2-28, 2-30, 2-31, 2-32, 2-33, 2-34, 2-35, 2-36, 2-37, 2-45, 2-53, 2-60, 2-79, 2-83, 2-85, 2-86, 2-90, 2-91, 2-92, 2-95, 2-98, 3-3, 3-4, 3-11, 3-14, 3-19, 3-20, 3-21, 3-22, 3-24, 3-25, 3-26, 3-28, 3-33, 3-43, 4-2, 4-10, 4-12, 4-14, 4-15, 4-16, 4-22, 4-25, 4-26, 4-29, 4-30, 4-38, 4-47, 4-48, 4-51, 4-52, 5-1, 5-2, 5-3, 5-5, 5-9, 5-14, 6-2, 6-8, 6-9, 7-5
four, 1-2
general support, 2-7, 2-14, 2-17, 2-20, 2-21, 2-22, 2-25, 2-26, 2-27, 2-30, 2-31, 2-35, 2-36, 3-19, 3-21, 3-22, 4-4, 4-6, 4-14, 4-15, 4-16, 4-29, 5-1, 5-2, 5-3, 5-13, 6-9, 7-5
unit, 2-20, 2-43, 2-45, 3-1, 3-36, 4-40
nondivisional, 3-19–23
objectives, 1-12, 7-1
personnel, tools, and equipment during cold weather operations, 3-40
support, 1-13, 2-45, 3-3, 3-5, 3-6, 3-7, 3-10, 3-22, 3-32, 4-20, 8-2, 8-8
sustainment (SM), 1-5, 1-8, 2-5, 3-21, 4-2–3, 4-4, 4-5, 4-29, 4-30, 4-31
tasks, 1-2, 2-18, 2-19, 2-26, 2-27, 2-33, 2-35, 2-61, 2-65, 2-83, 4-33, 4-35, 5-2
maintenance troop, 2-76
maintenance units, production methods used in, 4-29
management module, integrated (GCSS-Army), 1-20
MARS. *See* Military Affiliate Radio System
material safety data sheets, 8-11, 8-10–11
materials-handling equipment, 4-31, 4-33
materiel condition status report (MCSR), 4-18, 4-23
materiel management center (MMC), 2-9, 2-40, 2-55, 2-61, 2-65, 2-67, 2-74, 2-76, 2-79, 2-81, 3-20, 3-21, 4-6, 4-9, 4-10, 4-15, 4-16, 4-22, 4-40, 5-3, 5-4, 5-7, 5-9, 5-10, 5-12, 6-6, 6-9, 6-10, 6-12, 7-7
headquarters company, 2-9, 7-7
mechanic, 3-12, 3-41, 4-36, 6-15
medical command (MEDCOM), 2-1
medical company, 2-42, 2-48, 2-56, 2-59, 2-62, 2-66, 2-69, 2-73, 2-80, 2-81
medical troop, 2-76
metalworking, 2-18, 2-20, 2-23, 2-33, 2-43, 2-78, 2-81
metrology, 7-2
METT-TC. *See* mission, enemy, terrain, troops, time available, and civilian considerations
microwave systems, 2-22, 7-1
Military Affiliate Radio System, 2-3
military intelligence (MI), 2-44
military operations on urban terrain (MOUT), 4-49
military police (MP), 4-55
military standard requisitioning and issue procedure (MILSTRIP), 4-15, 5-11
military standard transportation and movement procedures (MILSTAMP), 5-11
MILSTAMP. *See* military standard transportation and movement procedures
minefields, protective, 4-55
mission, enemy, terrain, troops, time available, and civilian considerations (METT-TC), 2-15, 2-95, 2-98, 2-99, 2-102, 3-1, 3-20, 3-29, 3-30, 3-33, 4-1, 6-4, 6-8
mission-oriented protective posture (MOPP/MOPP-4), 3-12, 3-15, 3-16, 3-17, 3-18, 6-4, 6-6
mission training plan (MTP), 4-8
MMC. *See* materiel management center
mobile defense, 3-6, 3-8
mobility, 2-26, 2-27, 2-35, 2-36, 2-40, 2-55, 2-87, 2-100, 3-4, 3-8, 3-33, 3-42, 4-48, 4-53, 5-2
modular-designed element, 2-98
modularity, 2-96–100
definition and functions of, 2-96
major approaches to, 2-97
tenets of, 2-96–97
momentum, offensive, 3-5
MOPP. *See* mission-oriented protective posture
morale and welfare, 4-52
motivation, 4-7, 4-8, 4-11, 4-12, 4-13, 8-3
motor, 4-33

electric, 4-32
motor officer, 6-1, 6-2, 6-3
motor sergeant, 6-1, 6-3
mountain operations, 3-42–43
MOUT. *See* military operations on urban terrain
movement, 4-12, 4-26, 4-48, 4-49, 4-51–52, 4-51–52, 4-53, 5-10, 6-1, 6-4, 6-6, 6-7, 6-9, 6-10, 8-9, 8-22
movement, unit,
by shuttling, 4-53, 4-54
movement control team, 6-1, 6-10
MST. *See* maintenance support team
multinational chain of command, 3-28, 3-29
multinational force, 3-28, 3-29, 4-6
multiple-launch rocket system (MLRS), 2-45

N

National Institute of Standards and Technology (NIST), 2-10, 7-8
national inventory control point (NICP), 5-2, 5-14
manager, 5-2
national sustainment maintenance manager (NSMM), 1-8, 4-4, 4-5, 4-30, 4-31
NBC. *See* nuclear, biological, chemical (NBC)
nested modules, 2-99
NICP. *See* national inventory control point
night operations, 3-10–11
night sight, manportable, common thermal, 2-44
night vision devices, 3-11, 6-5
noise, 8-7, 8-18
noise and light discipline, 6-5
nontactical information systems, 3-21–23
nuclear, biological, chemical (NBC), 4-55, 6-4, 6-6, 6-7
agents, 4-55, 6-7
defense measures and decontamination plans, 4-55
environment, 3-11–18
recovery operations. *See* recovery in an NBC environment

O

observation post. *See* listening/observation post
offensive ground operations, 3-4
off-system maintenance, 1-14, 2-38
on-site maintenance, 2-18, 2-20, 2-25, 2-43, 2-45, 2-49, 2-81, 3-6, 3-7, 3-8, 3-17, 3-20, 3-24, 3-25, 3-26, 3-25–26, 3-41, 4-29, 4-32, 4-34, 4-40
on-system maintenance, 1-14, 2-38
on-the-job training, 2-10, 7-7
operational readiness float (ORF), 2-78, 2-81, 4-9, 4-15, 4-33, 4-36, 4-44, 4-45
transactions, 4-45
operational tempo, 3-5
operations, contingency, 2-91
operations, reconstitution, 2-91
organizational/direct support maintenance, combined, 1-15
organizational maintenance sections, 2-83

P

parts, contaminated, removal of, 3-15
passback support, 1-16, 1-17
Patriot missile system, 2-27, 2-28, 2-36, 2-37
peacekeeping operations, 3-28–30
perimeter, 360°, 8-8-14
personnel, responsibilities of, 2-101–5
battalion headquarters staff, 2-101
command sergeant major, 2-101
commander, 2-101
executive officer, 2-101
maintenance officer, 2-102, 6-8
maintenance sergeant, 2-103
maintenance technician, 2-102
S1 (Adjutant), 2-84, 2-101
S2 (Intelligence Officer), 2-84, 2-102, 5-55
S3 (Operations and Training Officer), 2-84, 2-101, 2-102, 3-2, 8-20
S4 (Supply Officer), 2-47, 2-84, 2-102, 3-2, 6-8, 8-20, 8-25
support operations officer, 2-101, 4-45
company personnel
commander, 2-103
executive officer, 2-103
first sergeant, 2-103
maintenance control officer (maintenance units), 2-104
maintenance service section NCOIC, 2-104
maintenance support teams (maintenance units), 2-105
maintenance team chief, 2-104
maintenance team mechanics, 2-104
recovery equipment operator, 2-104
recovery support section NCOIC, 2-104
supply sergeant, 2-103
systems support team (maintenance units), 2-105
personnel administration, 2-9
personnel command (PERSCOM), 2-1
personnel protective clothing and equipment (PPC&E), 8-4, 8-5, 8-7, 8-9, 8-11, 8-25
personnel safety/protection programs, 8-5–6
physical security, 8-13–14
pilferage, 4-54

planning, 3-2, 3-4, 3-7, 3-8, 3-9, 3-10, 4-29
platoons, modular, 2-20
PMCS. *See* preventive maintenance checks and services
point defense, 8-14
prescribed load list (PLL), 2-45, 2-53, 2-85, 2-86, 2-87, 2-95, 3-22, 3-33, 3-41, 4-18, 4-19, 5-2, 5-9
  automated, 4-18
preventive maintenance checks and services (PMCS), 3-39, 3-41, 4-21
printed circuit board (PCB), 2-20
production control, 4-2, 4-11, 4-12
production line, 4-29, 4-30, 4-32
production, planning, and control (PP&C), 4-29, 4-30
program manager, 5-2
property, accountability of, 2-20, 4-14
pursuit. *See* exploitation and pursuit

Q

quality assurance (QA), 4-2, 4-11, 4-13, 4-33, 7-7
quality assurance section, 2-10
quality control (QC), 4-13, 7-8
quality control inspections, 4-33–34
  final, 4-13, 4-33, 4-34, 4-37
  initial, 4-33, 4-34, 4-35
  in-process, 4-34
quality deficiency report, 4-4

R

radar, 2-20, 2-57, 2-78, 2-80, 8-9
target acquisition and surveillance, 2-44
RADIAC. *See* radiation, detection, indication, and computation
radiation, detection, indication, and computation (RADIAC), 7-1
radio frequency, 8-16
radio silence, 4-56
radioactive material, 8-8
radiological protection officer (RPO), 2-10, 7-7, 8-8
radios, 2-22
railway network, 6-10
reaction forces, 4-55
reactionary force tactics, 8-14–15
reclamation. *See* retrograde and reclamation
reconstitution operations, 3-9–11
recovery, 1-18, 2-87, 2-104, 3-9, 6-1, 6-3, 6-5, 6-1–7
  during night/limited visibility, 3-11, 6-5
  hazards of, 6-7
  in an NBC environment, 6-6
  management of, 6-2
  of abandoned equipment, 6-4
  of contaminated equipment, 6-4, 6-6
  of foreign materiel, 6-5, 6-9
  of general equipment, 6-6
  using-unit responsibility for, 6-1
recovery code (RC), 4-1
recovery support section, 2-87, 2-88, 2-104, 6-3
recovery vehicle, tracked, 6-2
recycling program, 8-21, 8-24
redeployment, 4-3
refrigeration, 2-18, 2-20, 2-33
refuel point, 3-26, 3-27
refugees, 3-44
regeneration. *See* assessment and regeneration
regional sustainment maintenance manager (RSMM), 1-8, 4-5, 4-30, 4-31
reorganization, 3-9
repair, 1-3, 1-6, 1-7, 1-12, 2-18, 2-25, 2-33, 3-4, 3-8, 3-12, 3-16, 3-22, 3-36, 3-41, 3-43, 4-2, 4-7, 4-10, 4-11, 4-30, 4-36, 4-37, 4-40, 4-43, 5-1, 5-2, 5-9, 6-3, 6-9
repair, maximizing of, 3-6
repair and recovery plan, 6-3–4
repair parts, 2-6, 2-9, 2-11, 2-17, 2-18, 2-19, 2-25, 2-27, 2-32, 2-33, 2-34, 2-36, 2-45, 2-49, 2-51, 2-53, 2-57, 2-60, 2-63, 2-64, 2-65, 2-67, 2-70, 2-71, 2-72, 2-74, 2-78, 2-80, 2-86, 2-87, 2-103, 2-104, 3-4, 3-5, 3-10, 3-11, 3-20, 3-22, 3-24, 3-25, 3-26, 3-27, 3-31, 3-32, 3-39, 3-41, 3-42, 3-43, 3-44, 4-2, 4-10, 4-11, 4-14, 4-15, 4-17, 4-25, 4-27, 4-33, 4-36, 4-37, 4-40, 4-46, 4-47, 4-48, 4-51, 5-1, 5-2, 5-3, 5-4, 5-5, 5-7, 5-8, 5-9, 5-12, 5-13, 5-15, 6-6, 6-12, 7-7, 7-8
  management of, 5-1
    operational level, 5-2
    strategic level, 5-2
    tactical level, 5-2
  management policies and procedures, 4-2
  manager, 5-3
  ordering of, 4-47
  process, 5-9
  provisioning of, 4-2
repair parts, critical, cannibalizing of, 6-14
repair parts stockage, 3-4, 3-8
repair parts supply
  acquisition process, 5-7
  alternative sources, 5-12–15
"Repair Rear," 1-14
repair shop section, 4-36, 4-37
reparable exchange (RX), 2-14, 2-18, 2-19, 2-33, 2-45, 2-49, 2-53, 2-58, 2-60, 2-65, 2-67, 2-72, 2-74, 2-81, 2-87, 2-95, 3-5, 3-21, 3-22, 3-27, 4-11, 4-29, 4-30, 4-48, 5-1, 5-4, 5-5, 5-8–9, 5-12

reparable exchange activity (RXA), 5-8, 5-9
reparable exchange section, 5-5
"Replace Forward," 1-14
report-of-survey action, 4-33
requisition and supply flow (high-priority ALOC), Class IX/maintenance-related Class II, 5-6
requisition and supply flow (low-priority ALOC), Class IX/maintenance-related Class II, 5-7
Reserve Component (RC), 4-1, 4-2, 4-4
Resource Conservation and Recovery Act (RCRA), 8-18
resources, 3-2, 3-4, 3-18, 4-1, 4-6–8
retrograde, 4-3, 4-10, 4-40, 5-8, 6-1, 6-12
retrograde and reclamation, 6-12
risk assessment/risk management, 3-28, 8-11, 8-12
risk management. *See* risk assessment/risk management
road network
  external, 4-49
  internal, 4-53
road patrols, 3-26
roadside service, 3-26
routing identification code (RIC), 4-2
RX. *See* reparable exchange

S

S4, brigade, 2-47, 2-48
SAAS-Mod. *See* Standard Army Ammunition System–Modified
safety/security, 2-6, 2-10, 2-19, 2-21, 2-26, 2-27, 2-35, 2-46, 2-61, 2-65, 3-5, 3-11, 3-15, 3-29, 3-30, 3-34, 3-37, 3-41, 3-42, 3-44, 4-23, 4-34, 4-49, 4-51–52, 4-54, 4-55, 5-8, 6-3, 6-4, 6-5, 8-1–12, 8-13, 8-14, 8-15, 8-16, 8-22, 8-23, 8-24, 8-25
  during jungle operations, 3-41
  during tactical operations, 8-14–15
  general hazards, 8-6–9
  requirements, minimizing effects of, 4-54–55
  responsibilities at individual level, 8-3
  responsibilities at leader level, 8-2
  responsibilities of commanders, 8-2
safety plans, 8-1
safety program, 8-1–2
salvage collection point, 5-3
SAMS. *See* Standard Army Maintenance System
sand, 3-34, 3-35, 3-36
SARSS. *See* Standard Army Retail Supply System
SASO. *See* stability and support operations
security. *See* safety/security
security program, continuous, 8-13
separate infantry brigade (SIB), 2-76, 2-79, 2-80, 2-81, 2-82
  maintenance company, 2-79–80
services
  finance/financial, 2-1, 2-9, 2-19, 2-33, 2-43, 2-45, 2-49, 2-53, 2-58, 2-60, 2-63, 2-65, 2-67, 2-70, 2-72, 2-74, 2-78, 2-81, 5-15, 7-7
  legal, 2-9, 7-7
  religious, 2-9
shelter, 3-11, 3-39, 3-40, 4-31, 4-32
shelter, field expedient, drape-type, 3-11
shipment delays, 5-11
shop office (maintenance control section), 4-10, 4-13, 4-24, 4-38, 4-45
shop replaceable unit (SRU), 2-45
shop stock, 4-15, 4-47, 4-48
  replenishment of, 4-41, 4-48
    use-one, order-one concept, 4-48
shop stock list (SSL), 4-15, 4-41, 4-42
shop supply operations, 4-46–48, 5-1
shop supply section, 4-36
signal, 2-5, 2-6, 2-19, 2-33, 2-44, 3-33, 4-53, 6-9, 8-13, 8-16
signal brigade area communication company, 2-33
signal security (SIGSEC), 8-13, 8-16
signal support, 4-53
signs, standard contamination, 3-13
SIGSEC. *See* signal security
Single Logistics Operator, 2-89
site selection and layout, 4-48–50
small arms, 2-18, 2-20, 2-23, 2-33, 2-43, 2-60, 2-78, 2-81, 4-32, 4-33
snipers, 3-44
SOP. *See* standing operating procedure
Spill Prevention and Response Plan, 8-24–25
stability and support operations (SASO), 2-13, 3-1, 3-28–31, 4-4, 4-5, 7-1
STAMIS. *See* Standard Army Management Information System
Standard Army Ammunition System–Modified (SAAS-Mod), 1-20
Standard Army Maintenance System (SAMS), 1-19, 1-20,

4-2, 4-12, 4-14–16, 4-22, 4-23, 4-34, 4-39, 4-40
automated communication capabilities, 4-16
data, daily analysis of, 4-39, 4-40
interface functions with ULLS-G, 4-22
printouts, daily analysis of, 4-40
progression of management levels, 4-16
SAMS-1, 4-14, 4-15, 4-16, 4-26, 4-35, 4-36, 4-38, 4-39, 4-41, 4-45, 4-46, 4-47, 5-4
commonly used reports, 4-27
inputs and customer benefits, 4-15
reports and outputs, 4-41–42
SAMS-2, 4-14, 4-15, 4-16, 4-39, 4-40, 4-42, 4-43, 4-46
reports and outputs, 4-42–44
Standard Army Maintenance System-Installation/TDA (SAMS-I/TDA), 4-15
Standard Army Management Information System (STAMIS), 4-2, 4-14
Standard Army Retail Supply System (SARSS), 1-20, 4-2, 4-15, 4-16, 5-4, 7-4
SARSS-1, 5-4, 5-5
SARSS-2, 5-4
SARSS-O, 5-4
standing operating procedure (SOP), 4-2, 4-54, 5-4, 5-15, 6-3, 6-4, 8-4, 8-5, 8-6, 8-8, 8-14, 8-21
for contaminated vehicles and equipment, 3-11
statement of work (SOW), 3-22, 3-23, 4-31
static electricity, 3-36
Stinger missile system, 2-27, 2-36, 3-34
stock control and accounting section, 5-4, 5-5, 5-7, 5-8
storage, 5-1, 5-4, 5-5, 5-8, 5-10, 8-2, 8-5, 8-10, 8-14, 8-15, 8-23
plan, 5-8
storage section, 5-4, 5-5
strategic lift, 2-99
supervisor, first-line, 4-8
supplies, airdrop of, 3-32, 3-42
supply and service company, 2-42
supply and transportation company, 2-80
supply and transportation troop, 2-76
supply manager, 5-3
supply point distribution, 5-8
supply policy below the wholesale level, 5-1
supply storage area, 4-49
supply support activity (SSA), 3-43, 4-48, 5-1, 5-4, 5-7, 5-9, 5-15, 7-7
organization, 5-3–5
battalion headquarters, 5-3
maintenance company, 5-4–5
procedures, 5-5–9
repair parts process, 5-7
supply support operations, 5-1–11
supply system, 5-2–3
retail level, 5-3
user (customer) level, 5-3
wholesale level, 5-2
support
airlift, 2-53, 2-55, 2-97
backup, 1-16, 2-20, 2-31, 2-32, 2-34, 2-43, 2-71, 2-90, 6-1
combat health, 2-19, 2-33, 2-39, 2-43, 2-45, 2-47, 2-48, 2-49, 2-53, 2-55, 2-58, 2-59, 2-60, 2-65, 2-67, 2-70, 2-72, 2-74, 2-76, 2-78, 2-79, 2-81
ground transportation, 2-53, 2-55
passback, 2-71
priority of, 3-9
redirection of, 3-5
support maintenance company (SMC), 2-38
support mission, out-of-sector, 2-91
support operations office, 4-10–13, 5-3, 6-2
management at battalion level, 4-10–11
management at company-level, 4-11–13
support operations officer, 2-41
support operations section, 2-48, 2-102, 3-21, 4-39, 4-40, 6-2
support teams, 3-7, 3-17, 3-25
sustainment maintenance. *See* maintenance system, Army, sustainment
system support team (SST), 2-39, 2-49

T

TAACOM. *See* theater army area command
tactical fire direction computer system (TACFIRE), 2-78, 2-80
tactical operations, 3-1–18
tactical operations center (TOC), 2-102
TAMMS. *See* The Army Maintenance Management System
tarpaulin, 3-33, 3-40, 3-41
task force (TF), 2-92, 2-94, 2-95, 3-2, 3-5, 3-29, 6-8
task force support, 2-90–95
unit maintenance organization for, 2-94–95
team, augmentation, 2-8, 2-25, 2-26, 2-27, 2-34, 2-35, 2-36, 2-46, 7-5
technical assistance, 2-18, 2-43, 2-45, 2-53, 2-57, 2-64, 2-67, 2-72, 2-74, 3-24, 4-2, 4-11
technical skill, 4-7, 4-8

technical supply elements, 2-64
teletypewriters, 2-18, 2-33
temperature, variations in, 3-36
terrain, 3-33, 4-53, 4-55
test, measurement, and diagnostic equipment (TMDE), 1-12, 2-7, 2-8, 2-9, 2-10, 2-11, 2-14, 2-20, 3-4, 3-20, 3-22, 4-4, 7-1, 7-2, 7-3, 7-4, 7-5, 7-6, 7-7, 7-8, 8-15
general purpose, 2-8, 2-11, 7-1, 7-5, 7-8
integrated material management system (TIMMS), 2-10, 2-11, 7-4, 7-8
maintenance support, 7-1–4
special purpose, 2-8, 2-11, 7-1, 7-5, 7-8
traceability channels, 7-2, 7-3
test, measurement, and diagnostic equipment (TMDE) maintenance company, 2-7–11, 7-5–8
headquarters, responsibilities of, 7-2, 7-6, 7-7, 7-8
quality assurance (QA) section, 7-7
textiles, 4-32
The Army Maintenance Management System (TAMMS), 1-19, 1-20, 2-85, 2-86, 4-16, 4-19, 4-20
theater ammunition functions, 2-14
theater army, 2-1, 2-25, 3-21
theater army area command (TAACOM), 2-1, 2-11, 2-12, 2-13, 2-15, 2-19, 2-21, 2-26, 3-19, 4-2, 4-10, 4-16, 4-40, 5-3, 5-4, 5-9, 5-10
organizations, 2-11
theater aviation maintenance program, 2-14
Theater Communications System (TCS), 3-21
theater finance command, 2-1
theater materiel management center (TMMC), 4-2
theater of operations, 2-1, 2-4, 2-7, 2-14, 3-21, 3-22
theater reserve stocks (TRS), 2-20
Theater Signal Command—Army, 2-5, 2-6, 3-21, 3-22, 3-23
theater signal maintenance company (sustainment), 2-6, 2-5–7
theater support command, 2-13
materiel management center (TSC MMC), 7-6
theater TMDE tactical operations, 7-5–8
TIMMS. *See* test, measurement, and diagnostic equipment, integrated material management system
tires, 3-4, 3-33
TMDE. *See* test, measurement, and diagnostic equipment
TMDE-GP. *See* test, measurement, and diagnostic equipment, general purpose
TMDE-SP. *See* test, measurement, and diagnostic equipment, special purpose
TOE. *See* equipment, table(s) of organization and
total quality management (TQM), 4-11, 4-12–13
TOW. *See* tube-launched, optically tracked, wire-guided (TOW) missile system
transportation command (TRANSCOM), 2-1
transportation motor transport company (TMT), 2-42, 2-56, 2-62, 2-67, 2-69, 2-74
transportation movements office, 4-53
transportation requests, 4-53
TSMC. *See* theater signal maintenance company (sustainment)
tub file, 4-27–28
tube-launched, optically tracked, wire-guided (TOW) missile system, 2-45, 2-50, 2-57, 2-60
turret, 2-tank, 2-20, 2-43

U

ULLS-A. *See* Unit-Level Logistics System-Aviation
ULLS-G. *See* Unit-Level Logistics System-Ground
UMCP. *See* unit maintenance collection point.
unit, internal management of, 4-51–56
Unit-Level Logistics System-Aviation (ULLS-A), 1-20
Unit-Level Logistics System-Ground (ULLS-G), 1-19, 1-20, 2-86, 3-24, 4-14, 4-15, 4-16–23, 5-4
and SAMS interface functions, 4-22
embedded training, 4-23
equipment data reports, 4-22
equipment data updates, 4-21
generated/equivalent forms, 4-20
hardware, 4-17
maintenance management outputs, 4-19
maintenance operational processes, 4-21
major inputs to, 4-17
unit-level maintenance
defensive operations, 3-6–7
offensive operations, 3-1–2
retrograde operations, 3-7–9
unit maintenance collection point (UMCP), 1-16, 2-85, 2-86, 2-87, 2-88, 2-95, 2-102, 2-104, 2-105, 3-2, 3-4, 3-5,

3-8, 3-20, 3-25, 4-12, 6-3, 6-4, 6-8
unit maintenance organization, combat units, 2-83–89
unit safety officer, 8-2, 8-3, 8-11
unit safety program, 8-3, 8-4
unit supply, 5-1
Unit Supply UPDATE, 4-2
United Nations (UN), 2-13, 2-40, 2-42, 2-48, 2-52, 2-55, 2-56, 2-59, 2-61, 2-62, 2-66, 2-68, 2-69, 2-73, 2-76, 2-80, 2-83, 3-19, 4-52
urban terrain, 3-43–44
US Army Aviation Missile Command (AMCOM), 7-2
US Army Engineer Center, 8-25
US Army Primary Standards Laboratory (USAPSL), 2-10, 7-2, 7-8
US Army TMDE Activity (USATA), 7-2, 7-5, 7-7, 7-8
US Naval Observatory, 7-2
USAPSL. *See* US Army Primary Standards Laboratory

V

vehicle, cover and concealment, 4-55
vehicle, recovery, 3-9, 3-26, 3-37, 3-44, 6-1, 6-2, 6-7
vehicle, tracked, 2-21, 3-8, 3-33, 3-34, 3-42
vehicle, wheeled 2-23, 2-57, 2-60, 3-33, 3-42
vehicle accidents, 8-10
  daily safety examination of, 8-7
vision protection, 8-5
visits. *See* inspections and visits

W

war, levels of, 1-5
  operational, 1-1, 1-2, 1-6, 1-7, 1-13, 1-16, 1-17, 1-19, 2-1, 2-4, 2-10, 2-13, 2-14, 2-20, 2-83, 3-2, 3-4, 3-9, 3-13, 3-15, 3-17, 3-21, 3-24, 3-25, 3-28, 4-9, 4-20, 4-21, 4-24, 4-45, 5-1, 5-2, 5-3, 5-5, 5-10, 5-14, 8-1, 8-13, 8-16, 8-17
  strategic, 1-5, 1-13, 2-4, 2-96, 2-99, 4-2, 5-1, 5-2
  tactical, 1-3, 1-5, 1-6, 1-9, 1-12, 1-13, 1-16, 1-18, 2-6, 2-34, 2-47, 2-86, 2-92, 2-95, 2-102, 3-2, 3-5, 3-8, 3-11, 3-15, 3-22, 3-26, 3-38, 3-41, 3-44, 4-8, 4-25, 4-48, 4-51, 4-55, 5-1, 5-2, 5-12, 5-13, 6-2, 6-4, 6-5, 6-14, 6-15, 8-13, 8-14
weapon system
  anti-armor, 2-44
  disarming of, 8-8
  ready-for-issue, 5-10
  ready-to-fight, 5-10
  replacement operations (WSRO), 5-10, 5-13
welding, 8-9
welfare. *See* morale and welfare
wind, 3-36, 3-40, 4-53
work, simplification and measurement of, 4-12
work flow, 4-34–38
work requests, status changes on, 4-46
workload, 6-3, 6-5
workload analysis, 4-11, 4-12
wrecker,wheeled, 6-2

X

x-system (of contamination marking), 3-12, 3-13

FM 4-30.3 (FM 9-43-1)
1 SEPTEMBER 2000

By Order of the Secretary of the Army:

ERIC K. SHINSEKI
General, United States Army
Chief of Staff

Official:

JOEL B. HUDSON
Administrative Assistant to the
Secretary of the Army
0021301

DISTRIBUTION:

Active Army, Army National Guard, and U.S. Army Reserve: To be distributed in accordance with the initial distribution number 115479, requirements for FM 4-30.3.